This document is “OKI DATA – CONFIDENTIAL”

Only persons and parties authorised by OKI DATA have permissions to access this document.

This document should not be accessed by any parties without the approval of OKI DATA.

Anyone who is found to be contradicting the above may be subject to legal action.

OEL
Maintenance Manual

ML5520eco/ML5521eco

Revision 2

Rev	Date	Oki Data Corporation
1	2010-11-17	
2	2012-01-16	
		Name
		ML5520eco/ML5521eco Maintenance Manual

Document Revision History

Rev.No.	Date	Corrected items			Person in charge
		No.	Page	Description of change	
1	2010-11-17			ISSUE	SMDE12 M. Ito
2	2012-01-16			Change of document	TD53 T.Suzuki

PREFACE

This maintenance manual describes how to maintain the PD426/427 printer in the field.
This manual is for customer engineers.
For further information, refer to the Users Manual for handling or operating the equipment.

The relation between the destination point and the model name of this printer is as follows.

Destination point	PD426	PD427
For ODA/ACTIVANT	MICROLINE 420	MICROLINE 421
For AOS1	MICROLINE 720 Plus	MICROLINE 721 Plus
For OEL	MICROLINE 5520 eco	MICROLINE 5521 eco

* ML420 has a standard color and a Dell color.

Contents

1. CONFIGURATION 6

1.1 Standard Printer Configuration 6
1.2 Options 7

2. THEORY OF OPERATION 9

2.1 Electrical Operation 9
2.1.1 Summary 9
2.1.2 SOC and the Peripheral Circuit 9
2.1.3 Initialization 12
2.1.4 Interface Control 13
2.1.5 Print Control 16
2.1.6 SP/LF Motor FAN Control 18
2.1.7 Operation Panel 21
2.1.8 Alarm Circuit 23
2.1.9 Power Supply Unit 26
2.2 Mechanical Operation 28
2.2.1 Printhead Mechanism and Operation 28
2.2.2 Spacing Operation 31
2.2.3 Head Gap Adjusting 32
2.2.4 Ribbon Drive 34
2.2.5 Paper Feed Operation 35
2.2.6 Paper Detection Mechanism 45
2.2.7 Automatic Sheet Feed 47
2.2.8 Paper Park Function (Continuous paper) 49

3. ASSEMBLY/DISASSEMBLY 50

3.1 Precaution for Parts Replacement 50
3.2 Service Tools 51
3.3 Disassembly/Reassembly Procedure 52
3.3.1 Printhead 54
3.3.2 Ribbon Protector 55
3.3.3 Pull-up Roller Assy 56
3.3.4 Upper Cover Assy, Access Cover Assy and Sheet Guide Assy 57
3.3.5 Gear Case Assy 58
3.3.6 PC Connector 59
3.3.7 Space Motor, Guide Roller Assy 60
3.3.8 Space Rack 61
3.3.9 Carriage Cable 62
3.3.10 Backup Roller Holder Assy 63
3.3.11 Platen Assy 64
3.3.12 Main Control PCB 65
3.3.13 LF Motor 66
3.3.14 Operation Panel PCB 67
3.3.15 Power Supply Unit, Sensor PCB 68
3.3.16 AC inlet and AC Switch 69
3.3.17 Change Lever and Gears 70
3.3.18 Carriage Shaft 71
3.3.19 Paper Pan 72

3.3.20 Rear Tractor Assy 73
3.3.21 Rear Pressure Assy 74
3.3.22 Switch Lever 75

4. ADJUSTMENT 76

5. CLEANING AND LUBRICATION 85

5.1 Cleaning 85
5.2 Lubrication 86

6. TROUBLESHOOTING AND REPAIR 93

6.1 Items to Check Before Repair 93
6.2 Troubleshooting Table 93
6.3 Lamp Display 94
6.4 Connection Circuit Check for Printhead and SP/LF Motor 98
6.5 Troubleshooting flow chart 100

APPENDIX A PCB LAYOUT 111

APPENDIX B RS-232C SERIAL INTERFACE BOARD (OPTION) 112

1. CONFIGURATION

1.1 Standard Printer Configuration

This printer consists of the following assemblies:

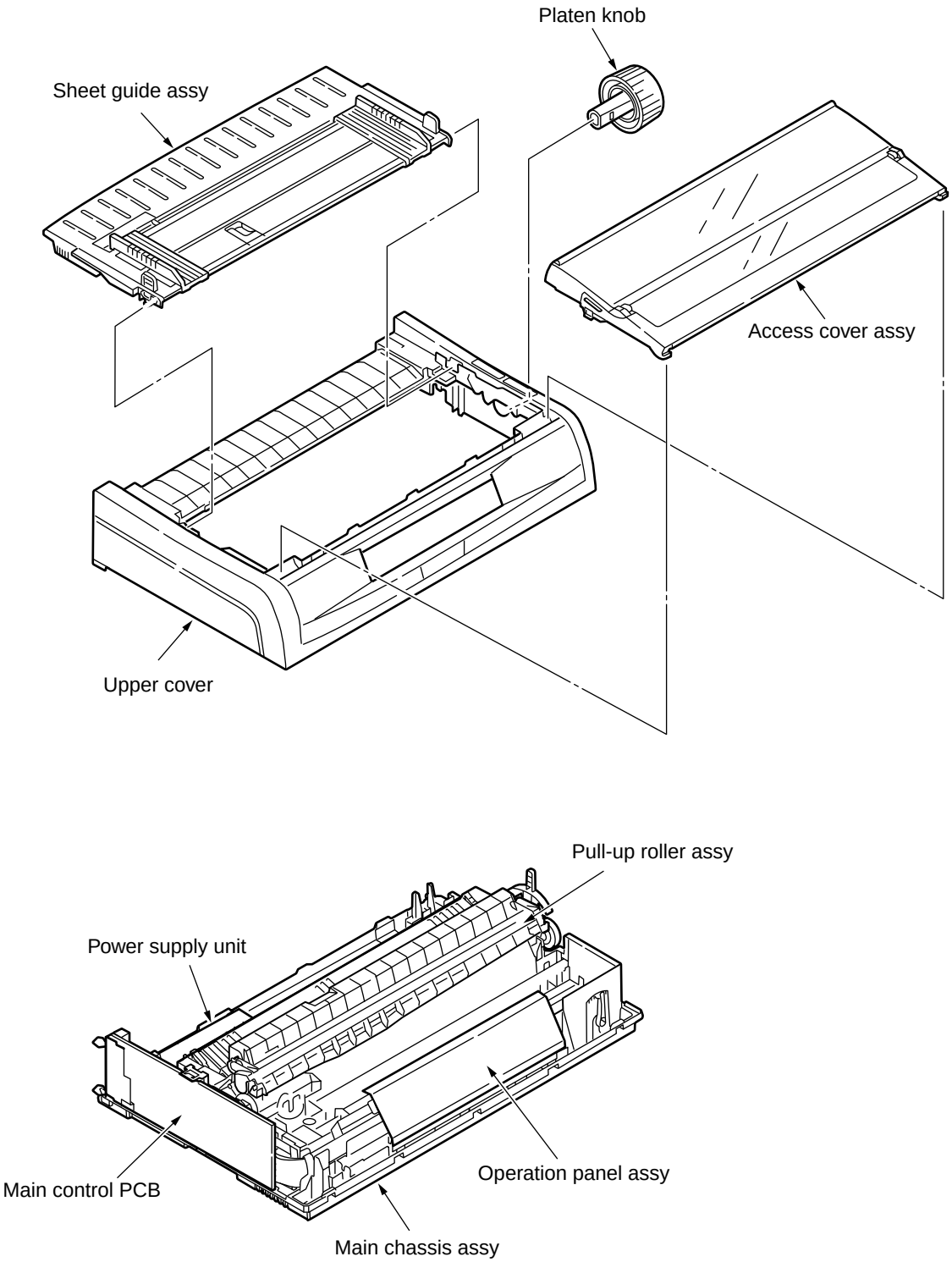

Figure 1-1 Configuration

1.2 Options

(1) Cut sheet feeder unit (CSF)

(Narrow and wide versions available)

Single-bin CSF

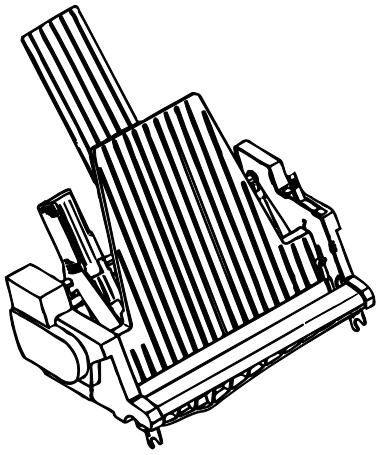

Attachment assy

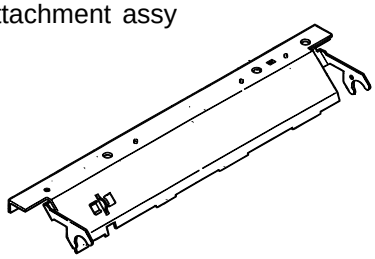

(2) Pull-tractor assy

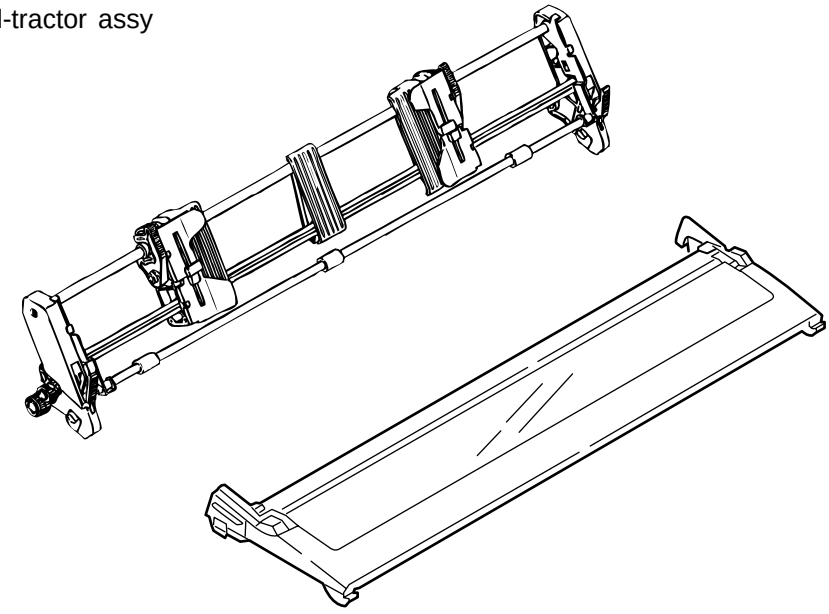

(3) Bottom push tractor unit

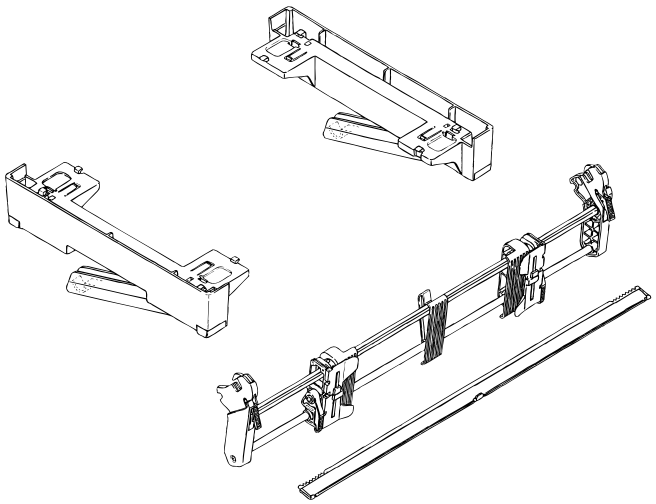

(4) Roll paper stand (Narrow only)

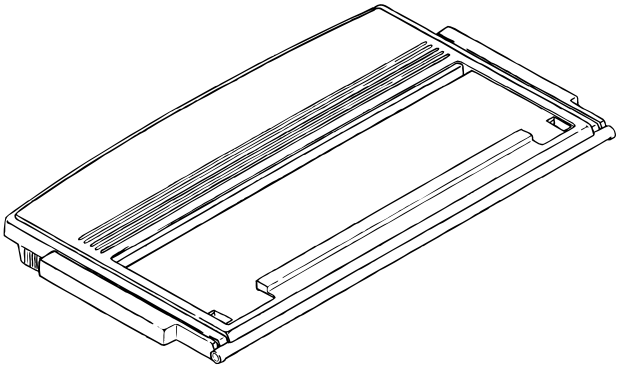

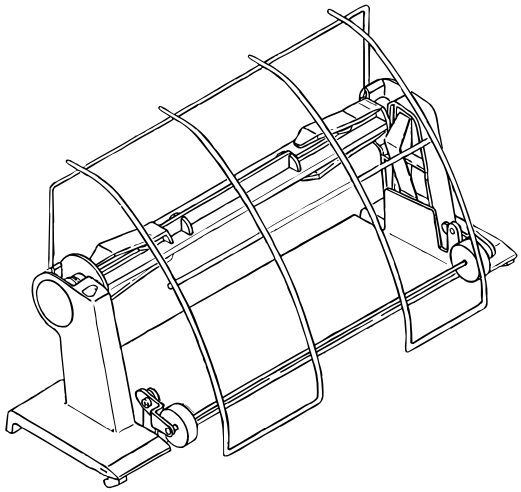

(5) Option I/F Board

- RS232C Serial interface board

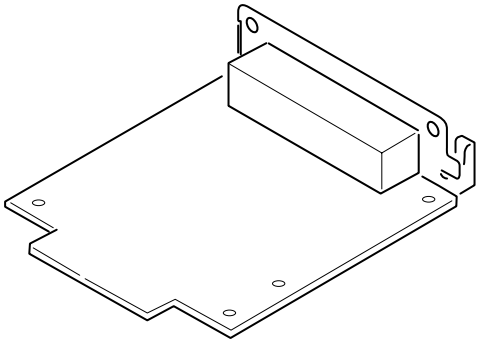

- OKI LAN board

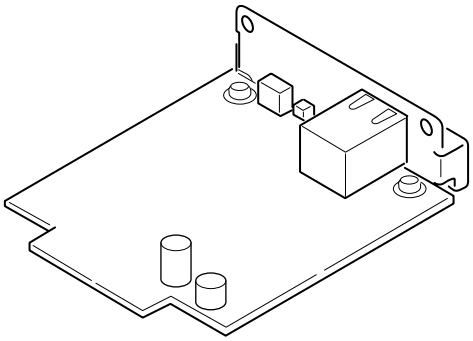

2. THEORY OF OPERATION

2.1 Electrical Operation

The electrical operation of the printer circuit is described in this section.

2.1.1 Summary

Figure 2-1 shows the block diagram of the printer.

The Main Control PCB is made up of the SOC (SYSTEM ON CHIP), peripheral circuits, drive circuits, sensors and interface connectors.

The power to the Main Control PCB is supplied by the power supply unit through the connector cord.

The power to other electrical parts is also distributed through the connectors within the Main Control PCB.

2.1.2 SOC and the Peripheral Circuit

(1) SOC

SOC to be CPU and past LSI function, building SRAM into, and the outline of use is as follows.

- 3.3V single power supply (1.2V in internal core voltage)
- Operation frequency 48MHz
- Built-in CPU core (ARM7TDMI)
- SRAM 4M bit
- With built-in USB controller
- With built-in UART function
- AD converter x 4ch DA converter x 2ch

OKI of other peripheral circuitry is original though CPU core uses ARM7TDMI.

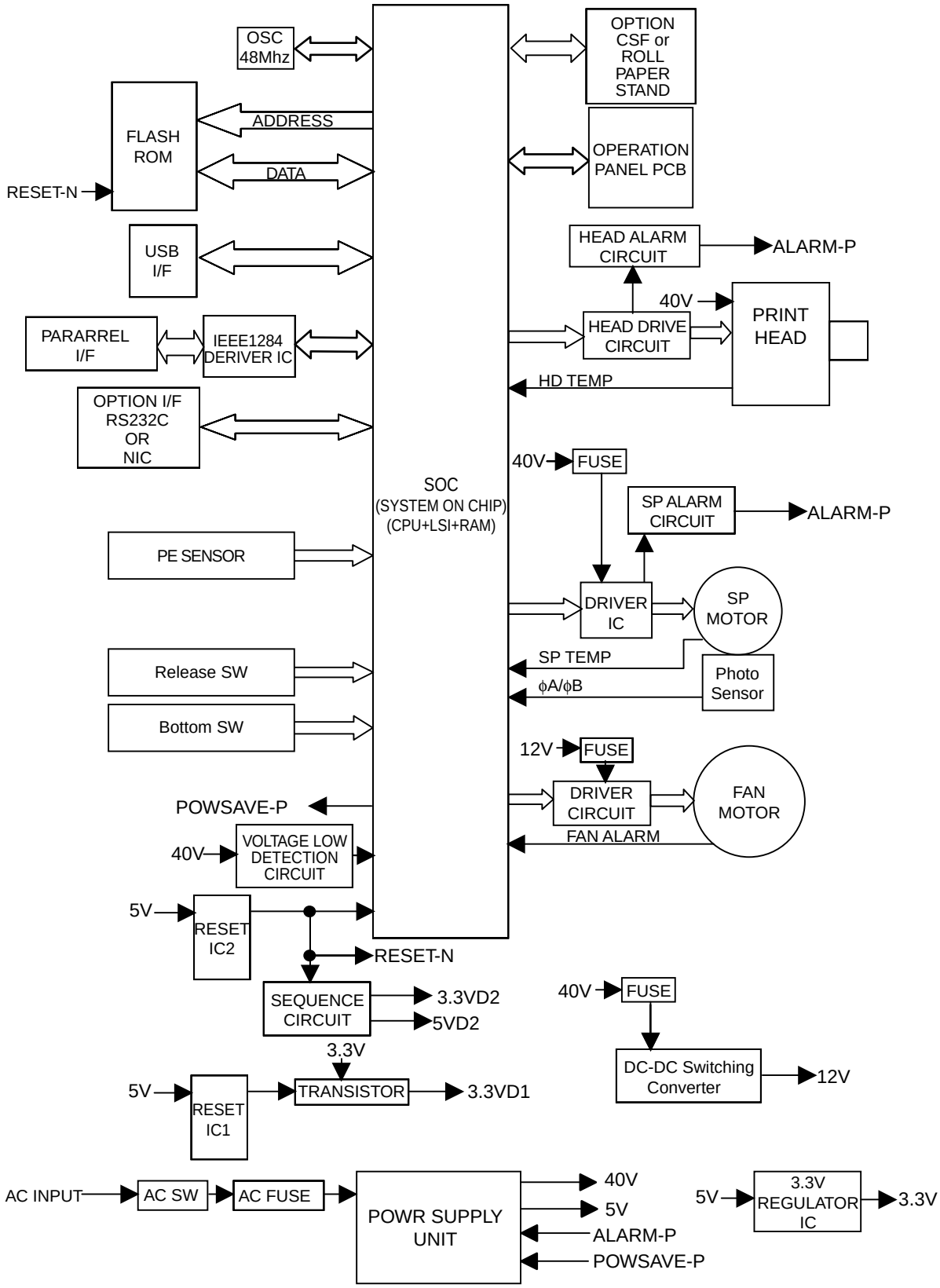
OSC
48Mhz
FLASH
ROM
ADDRESS
DATA
RESET-N
USB
I/F
PARARREL
I/F
IEEE1284
DERIVER IC
OPTION I/F
RS232C
OR
NIC
SOC
(SYSTEM ON CHIP)
(CPU+LSI+RAM)
PE SENSOR
Release SW
Bottom SW
POWSAVE-P
40V
VOLTAGE LOW
DETECTION
CIRCUIT
5V
RESET
IC2
RESET-N
SEQUENCE
CIRCUIT
3.3VD2
5VD2
3.3V
5V
RESET
IC1
TRANSISTOR
3.3VD1
AC INPUT
AC SW
AC FUSE
POWR SUPPLY
UNIT
40V
5V
ALARM-P
POWSAVE-P
OPTION
CSF or
ROLL
PAPER
STAND
OPERATION
PANEL PCB
HEAD ALARM
CIRCUIT
ALARM-P
40V
HEAD DRIVE
CIRCUIT
PRINT
HEAD
HD TEMP
40V
FUSE
SP ALARM
CIRCUIT
ALARM-P
DRIVER
IC
SP
MOTOR
SP TEMP
ϕA/ϕB
Photo
Sensor
12V
FUSE
DRIVER
CIRCUIT
FAN
MOTOR
FAN ALARM
40V
FUSE
DC-DC Switching
Converter
12V
5V
3.3V
REGULATOR
IC
3.3V

Figure 2-1

(2) Program ROM (external FLASH ROM)

The program to make the printer work is stored in FLASH ROM as external ROM.

FLASH ROM that can be installed is 64Mbit(16 x 4096k) or less. The access timing of the outline to FLASH ROM is shown in the following.

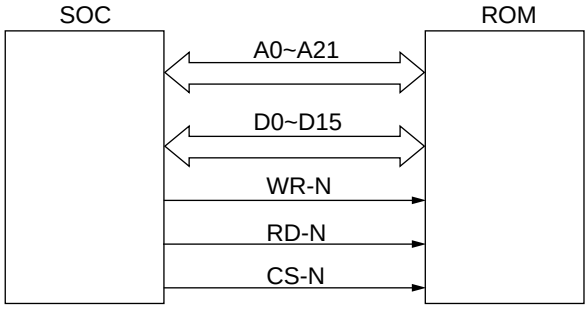

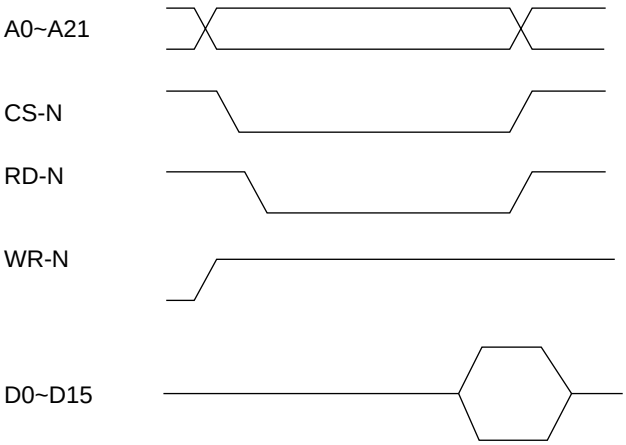

(3) RAM

In RAM, the memory capacity built into SOC is 256K x 16bit (4Mbit).

(4) USB Controller

The USB Controller detects and controls the USB interfacee.

The USB controller is built into SOC. The figure below shows the outline circuit.

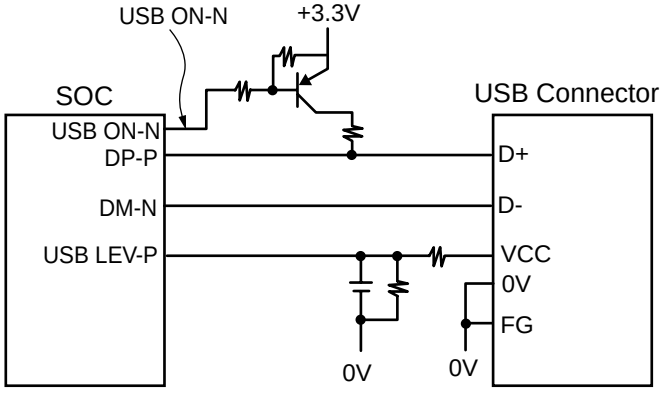

2.1.3 Initialization

This printer is initialized when the power is turned on or when the I-PRIME-N signal is input from the host side via the parallel interface.

For the initialize operation, the RST-N signal is first output from the reset circuit to reset the SOC and Flash ROM. When resetting ends, the program starts. Reset operation by I-PRIME starts program to initialize, but does not reset the SOC.

The program here sets the mode of the SOC, checks the memories (ROMs and RAMs), then carries out carriage homing, and determines the LF motor phase.

Finally, the program establishes the interface signals (P-I/F: ACK-P signal sending, and S-I/F: BUSY-N signal off) and lights the SELECT lamp to inform the ready state for receiving to the host side and ends the initialize operation.

After USB I/F control I/O initialization and USB I/F bus opening.

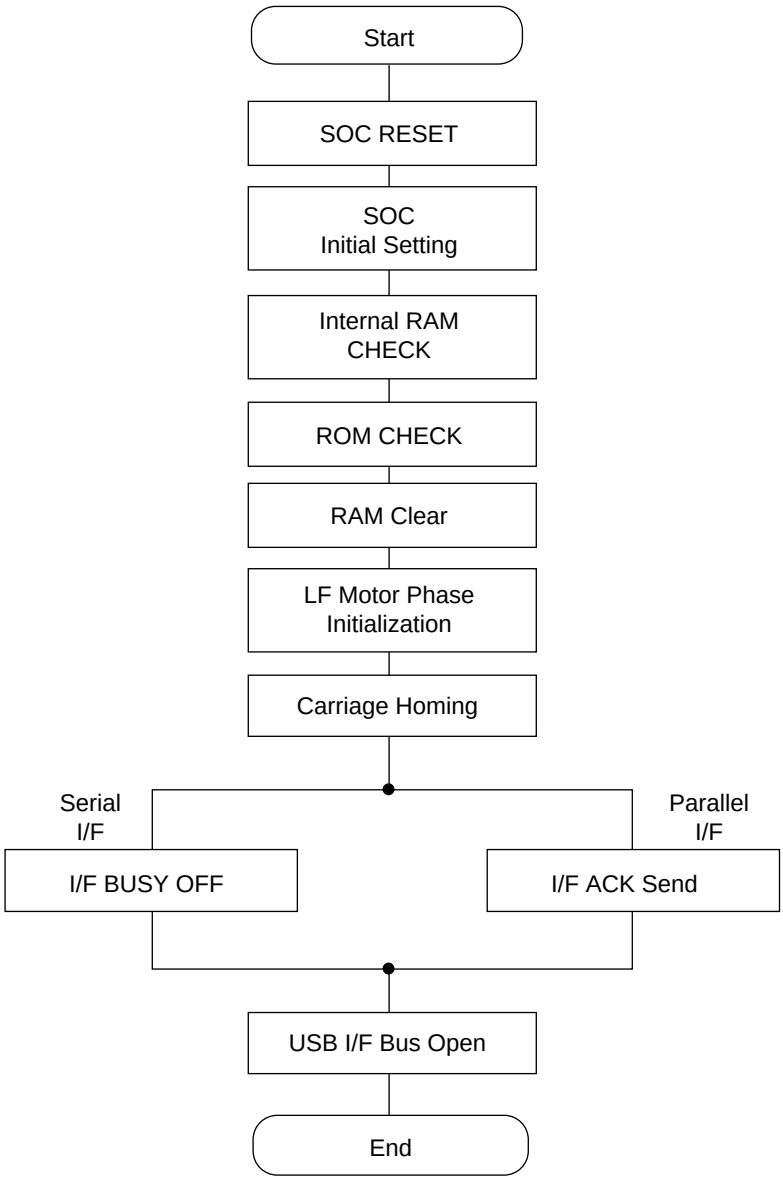

2.1.4 Interface Control

(1) Parallel Interface

The parallel data input from the host to the interfaced SOC is latched to its internal register at the falling edge of the STROBE-N signal.

At the same time, the SOC sets the BUSY signal to the high level to inform the host that the data is being processed, and outputs the RXD signal to inform the SOC of data reception. The data is read upon receiving the RD-N signal from the SOC.

When the data processing ends, the BUSY signal is set to off and the ACK-N signal in sent to request the next data. When reception is impossible because the buffer is full, the BUSY signal is sent to request stopping of data transmission.

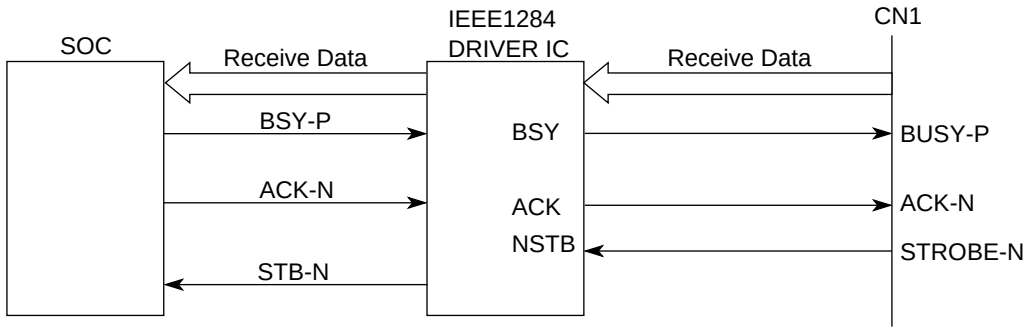

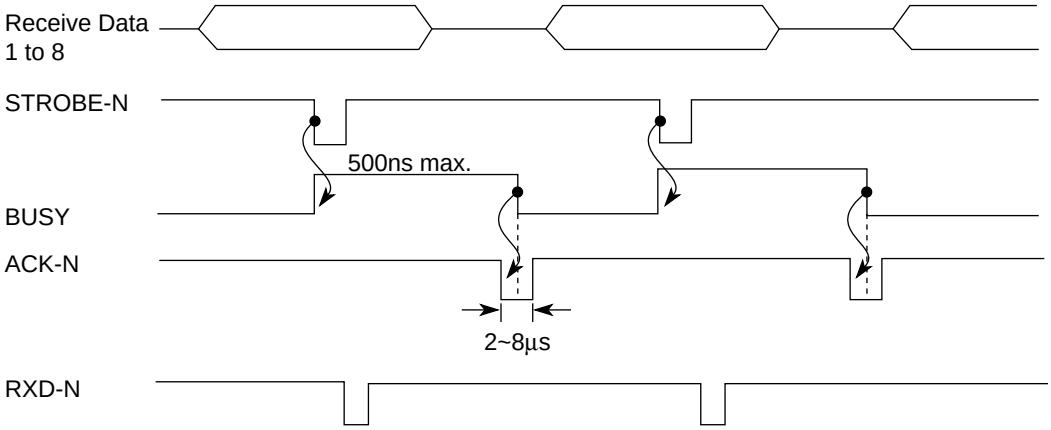

* The $\overline{\text{STROBE}}$-based timing for the BUSY signal is adjustable from the Maintenance menu.

$\overline{\text{ACK}}$ signal timing and BUSY signal timing can be adjusted from the Maintenance menu.

(2) Universal Serial Bus (USB)

Universal Serial Bus Specification Revision 2.0 (Full speed) compliance.

1) Connector

- Printer Side : “B” Receptacle (Upstream Input to the USB Device)
- Cable Side : Series “B” Plug

2) Cable

- Cable Length : Approx 1.8m (A cable must be met USB Spec Rev 1.1 for normal operation)

Note: Cable is not supplied.

3) Table of USB I / F signals

Contact Number	Signal Name	Typical Wiring Assignment
1	Vbus	Red
2	D -	White
3	D +	Green
4	GND	Black
Shell	Shield	Drain Wire

4) Connector pin arrangement

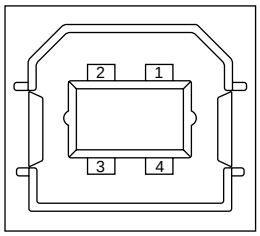

5) Mode & Class of Device

- Full - speed Driver
- Self - powered Device

6) Data Signaling Rate

- Full - speed function - 12Mb/s ± 0.25%(2500ppm)

7) Interface circuit

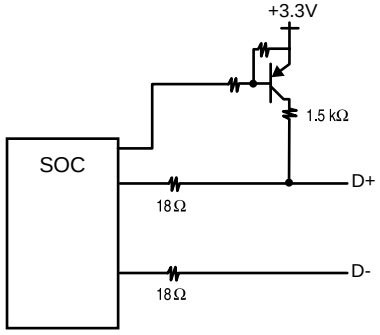

8) Signal Level

- Input / Output Level

Parameter	Symbol	Min.	Max.	Units
Input Levels :				
High (driven)	V_{IH}	2.0		V
High (floating)	V_{IHZ}	2.7	3.6	V
Low	V_{IL}		0.8	V
Output Levels :				
Low	OL	0.0	0.3	V
High (driven)	OH	2.8	3.6	V
Output Signal Crossover Voltage	V_{CRS}	1.3	2.0	V

2.1.5 Print Control

Print data is transmitted as parallel data (HD01~HD09) from SOC to print head. SOC generates print timing and drive time.

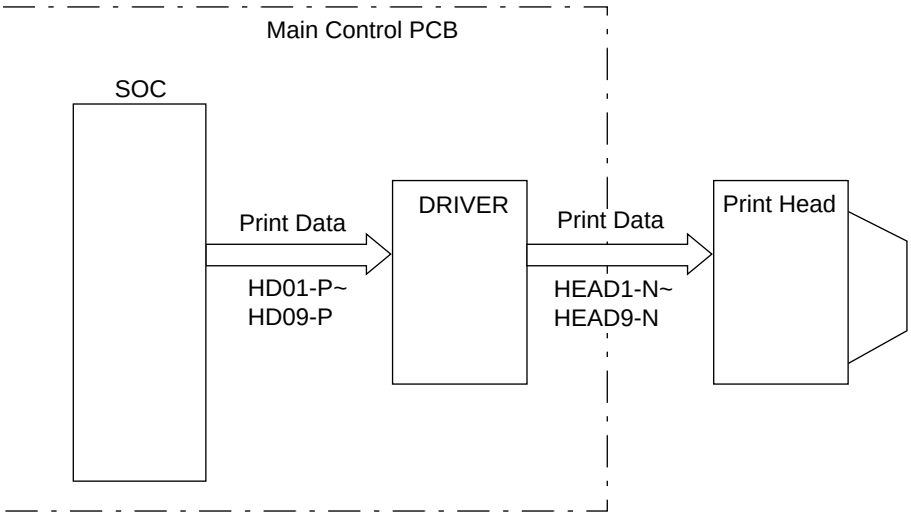

HEAD DRIVE TIMING CHART

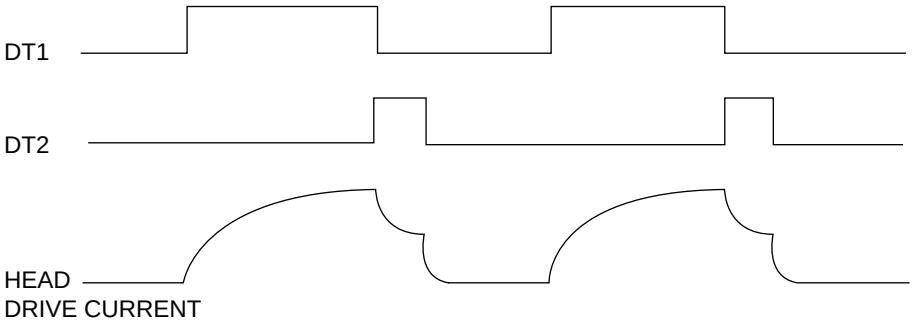

Print Compensation Control

The print compensation can be made as shown below:

(a) Voltage compensation (See 2.1.8 “Alarm Circuit.”)

(b) Temperature compensation (See 2.1.8 “Alarm Circuit.”)

(c) Pin stroke compensation

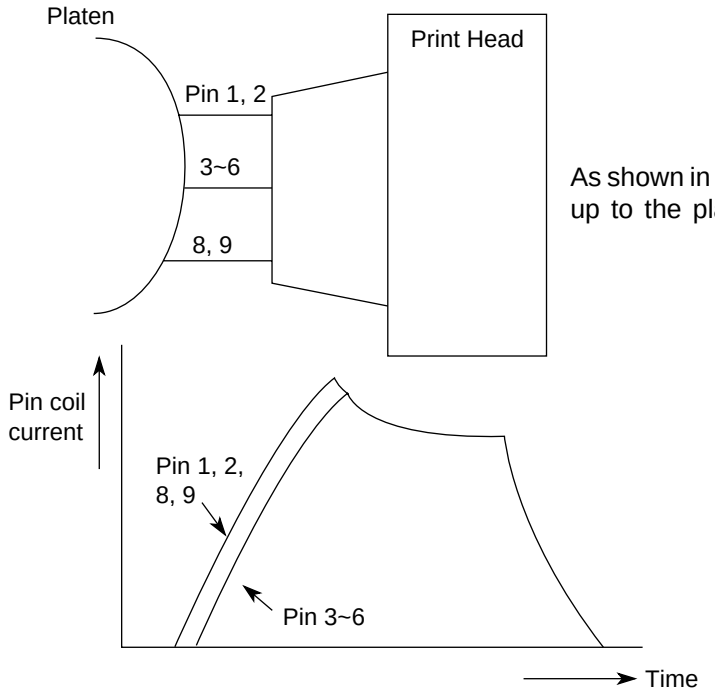

As shown in the drawing left, the stroke length up to the platen is different for each pin.

(d) Simultaneous Compensation of the number of impact pins

The SOC is provided with the compensation table for each pin to make necessary compensation.

Number of impact pins	Few ⟷ Many
Drive time	Short ⟷ Long

(e) Print mode compensation

According to the thickness of the printing medium, the print mode is compensated as shown in the table below:

Head Gap Range	1	2	3	4	5
Print speed	100%	90%	85%	85%	80%
Drive time	Short ⟷ Long				

(Drive time lengthens at each step.)

2.1.6 SP/LF Motor FAN Control

(1) Space motor control

The SP motor driver (BD6206FS) drives the three-phase brushless motor based on the phase signal (SPU-P, SPV-P and SPW-P) from the speed instruction data from the SOC. The SOC can identify the current speed of the space motor by measuring through the pulse length of the output (øA, øB) of the slit encoder included in the space motor.

By comparing the target speed for each print mode with the actual current speed to change the speed instruction data, the motor speed is accelerated or decelerated to maintain the specified speed for each print mode.

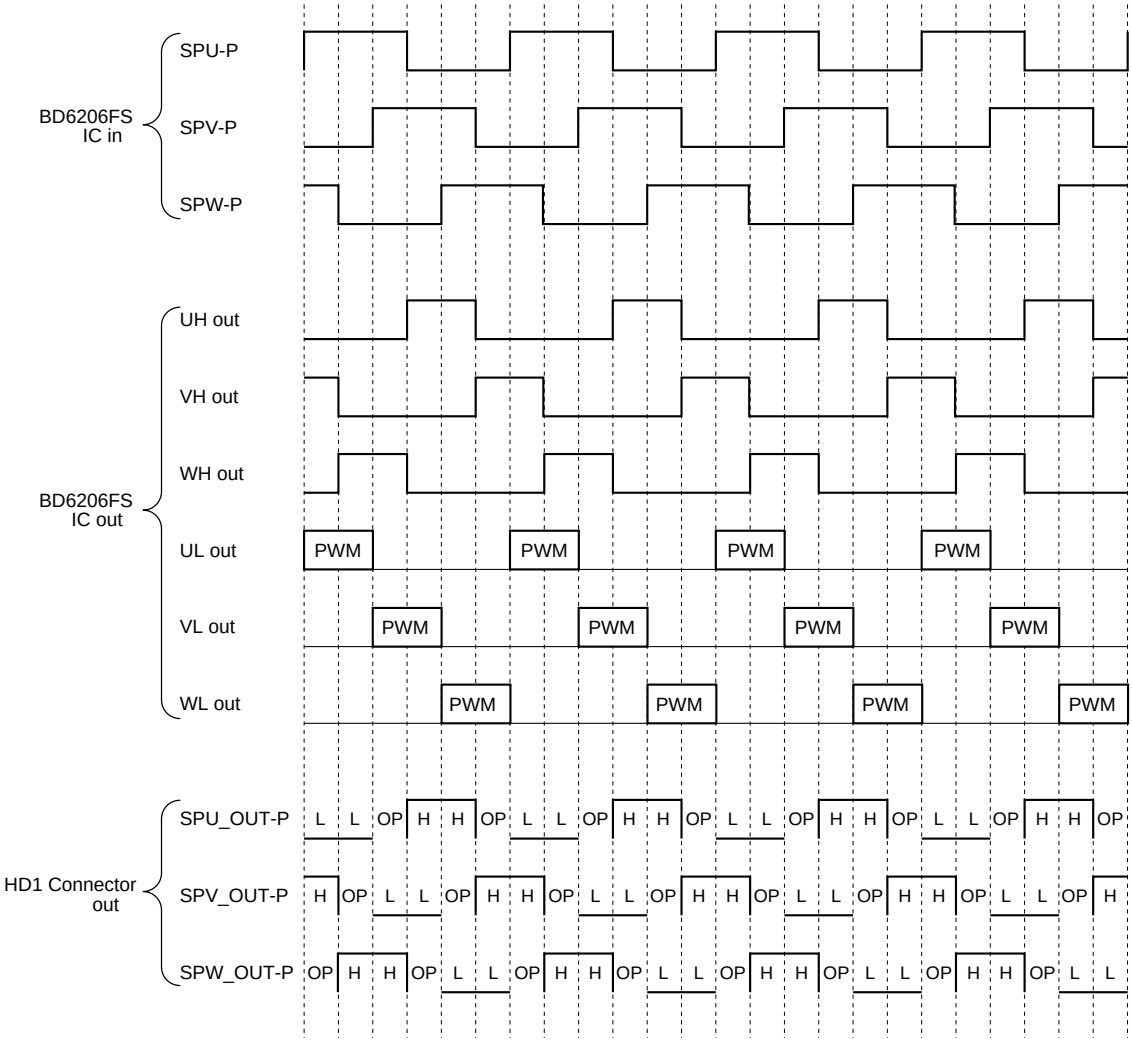

(2) Encoder disk

In the operation of the spacing motor, the PHASE-A and PHASE-B signals are generated when the encoder disk interrupts the photo sensor.

The SOC divides these edge pulse signals in accordance with the print pitch, and sends the IPT signal to provide dot-on timing and carriage position detection timing.

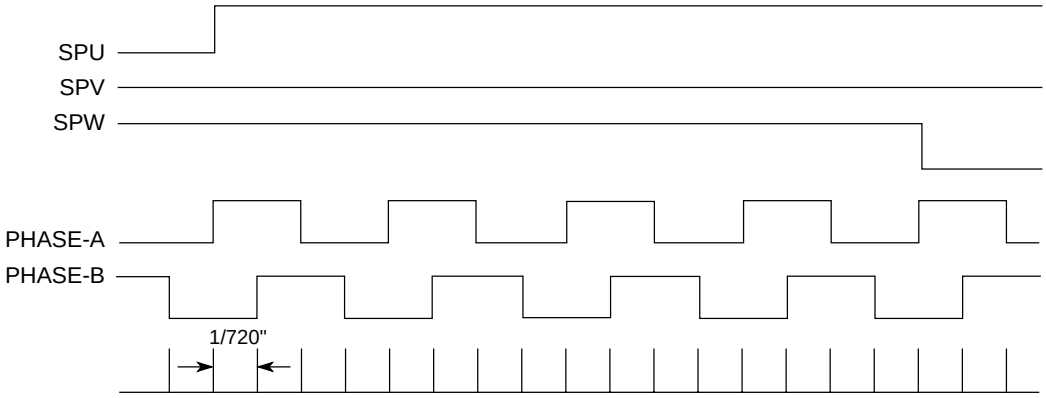

• UTILITY MODE

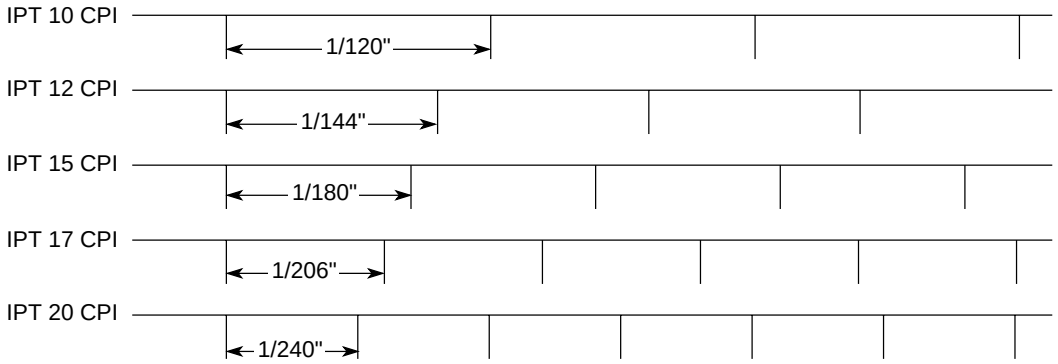

(3) LF motor control

The motor that uses it is PM type stepping motor.

The outline circuit composition : as shown in the following figures.

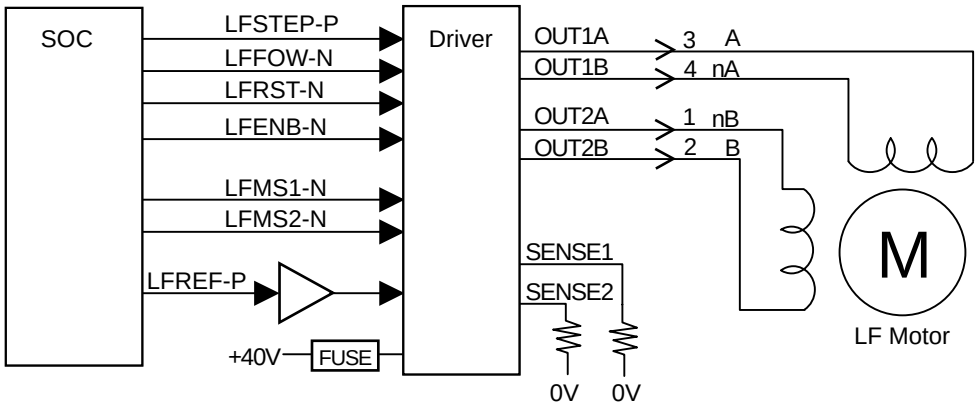

The drive system is a bipolar fixed current drive method.

The LFSTEP-N signal is clock signals, OUT1A, 1B and OUT2A, 2B signals are turned on synchronizing with the signal, the current flows to the motor each aspect, and the motor rotates.

The method of exciting the aspect by combining signals of LFMS1-N and LFMS2-N is set.

The direction of the rotation is set by the LFFOW-N signal.

The motor drive current value is set by the LFREF-P signal.

The platen rotates for one step 1/432 inches in case of two aspect excitation method and the motor rotates.

(4) FAN control

The motor that uses it is DC brushless FAN motor.

The outline circuit composition is as follows.

On/off is controlled by control signal MAINFANON-P from SOC.

When the motor stops by some factors when the motor rotates, the FANALM-P signal is sent from FAN, and this signal is recognized with SOC and it is assumed fan alarm.

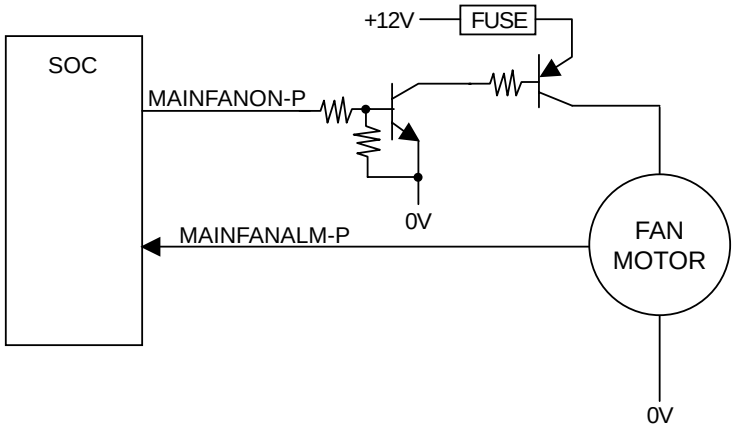

2.1.7 Operation Panel

The clock synchronization OPCLK of SOC is used to input the switch data and output the LED data through the operation panel control IC.

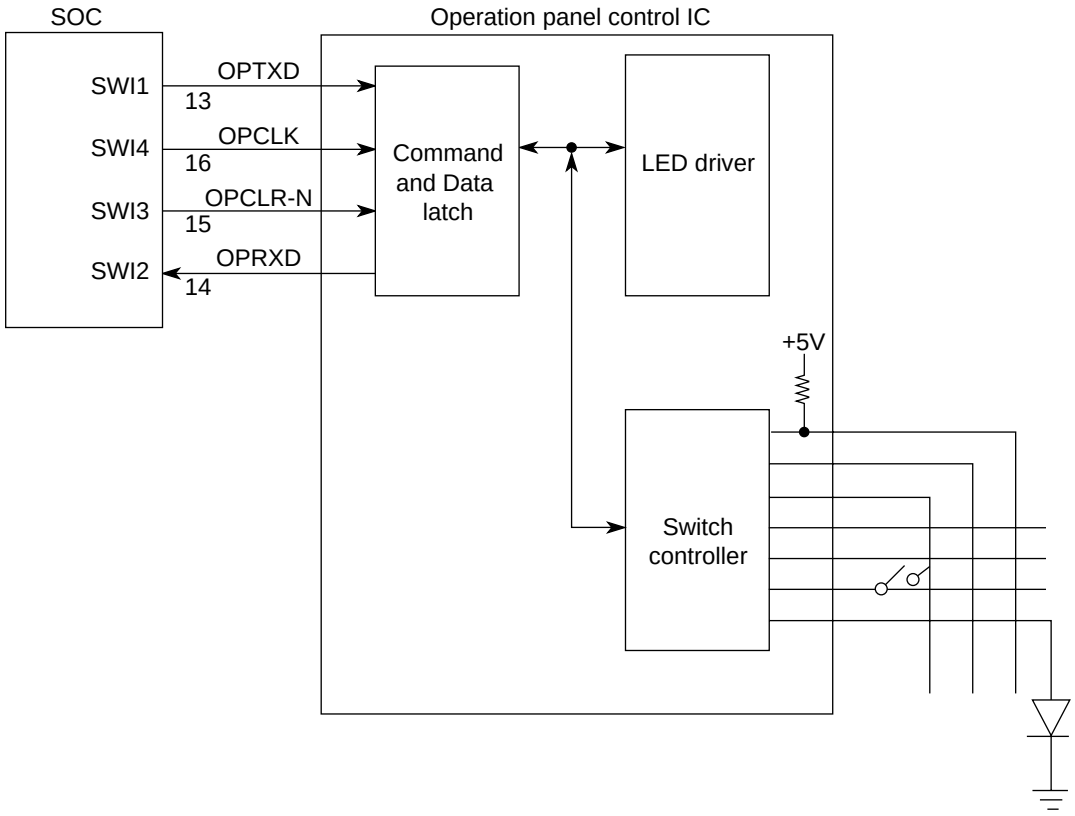

A 2-byte (15 bits + 1 even parity bit) command (OPTXD) is transmitted to the Operation panel control IC in synchronization with the OPCLK signal. The Operation panel control IC decodes this command and when it is found to be legal, returns a 2-byte command response back to the SOC which includes data on Switch information, LED status, receive command ACK/NAK and 1 odd parity bit.

Any transmission errors found cause the command to be reissued after the transmission of the OPCLR-N signal.

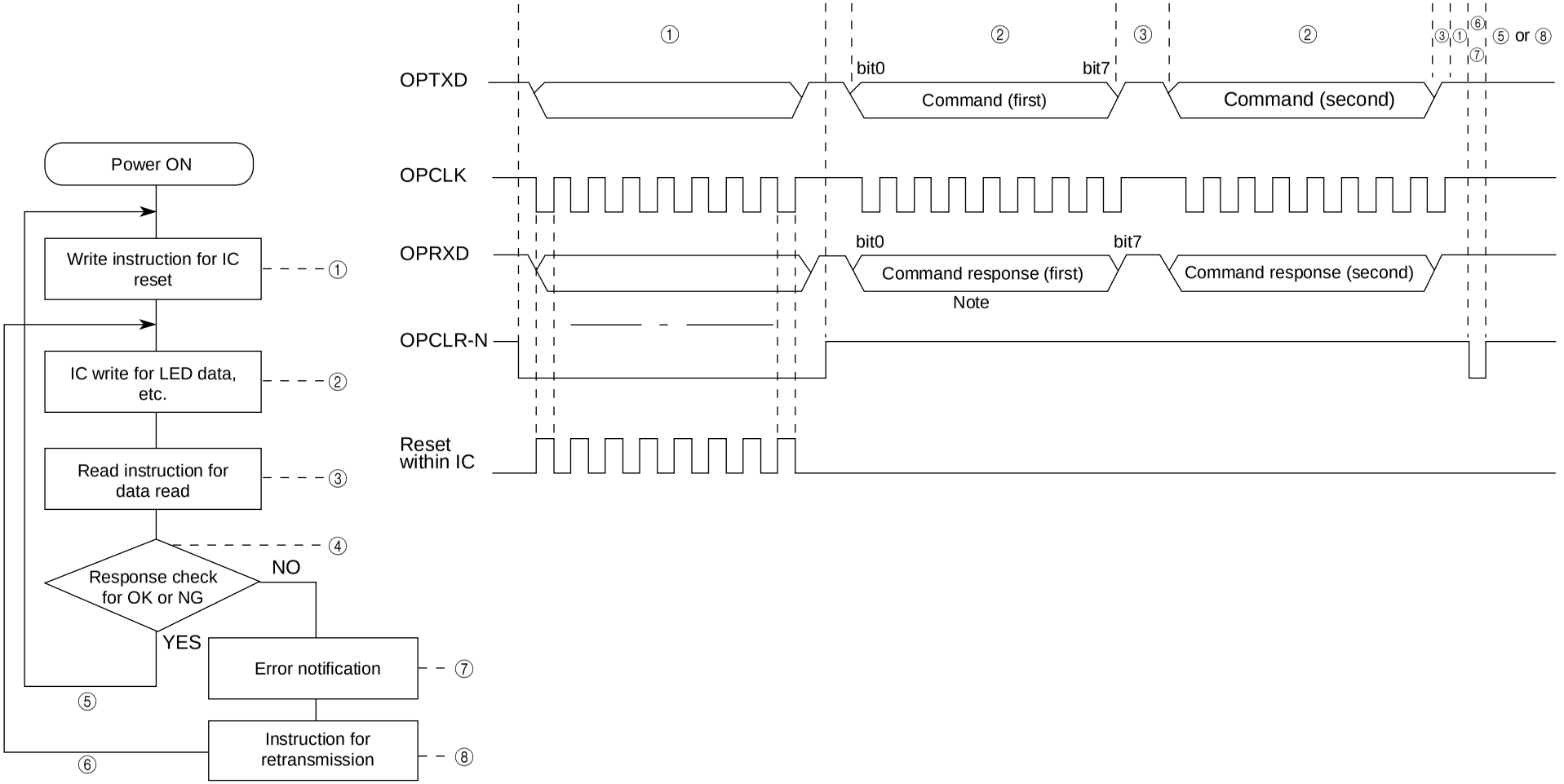

Note: From the illustration above, you can see that the command and the command response are output at the same time. This is because the bit 0 to bit 3 of OPRXD are fixed so that the response can be returned before decoding the command.

2.1.8 Alarm Circuit

(1) Head drive time alarm circuit

This circuit monitors the drive time using the DT1ALM1-N signal interlocked with the overdrive signal of each drive circuit.

If the drive time of any drive circuit exceeds the specified time, the drive fault alarm circuit sends an ALM-P signal to POWER SUPPLY UNIT.

This signal turns off +40V and +5V output. This state is maintained after the power switch is turned off until the power supply resumes about 30 seconds later. Until the cause of the output of the ALM-P signal is removed, even if the power supply is resumed this function operates so that no +40V and +5V output occurs.

(2) Alarm processing when DC power is low.

+40V is converted into the DC LOW-N signal (0V to about 3.3V) by resistors and input into the A/D port of the SOC to control the drive time and the print speed (pass number) of the head.

(a) Head drive time

The head drive time is lengthened to compensate for the amount of voltage by monitoring the DC LOW-N signal and maintain the impact necessary for each printing pin at the fixed value.

(b) Print speed

Voltage, +40V	Pass number	Print speed
36V or more	1 Pass	100%
Less than 36V	2 Pass	50%

(3) FAN alarm

The SOC detects 3.3V on the signal even through the fan is driven.

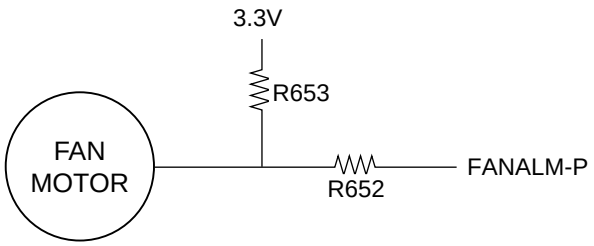

(4) Space motor drive alarm circuit

This circuit monitors the drive time and drive current using the SPMALM-P and SP_OVER_C-P signals interlocked with the overdrive signal of FET of Phase U, V and W.

If the drive time of any drive circuit exceeds the specified time, or if the drive current more than the specified current, the drive fault alarm circuit sends an ALM-P signal to POWER SUPPLY UNIT.

This signal turns off +40V and +5V output. This state is maintained after the power switch is turned off until the power supply resumes about 30 seconds later. Until the cause of the output of the ALM-P signal is removed, even if the power supply is resumed this function operates so that no +40V and +5V output occurs.

(5) Overheat alarm

(a) Head overheat alarm

The voltage of the output HTEMP signal of the thermistors, one of which is contained in the print head is monitored by the A/D port of the SOC to control the voltage.

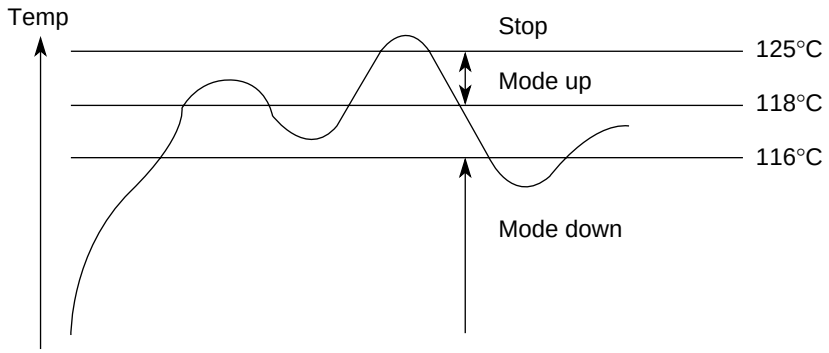

Mode and print control

• Characters less than 38ips

Mode	DUTY	PrintSpeed	Pass
1	100%	100%	1
2	87%	100%	1
3	30%	100%	1
4	13%	90%	1
5	9%	80%	1
6	5%	70%	1
7	0%	Stop	–

• Characters more than 38ips

Mode	DUTY	PrintSpeed	Pass
1	100%	100%	1
2	87%	85%	1
3	30%	70%	1
4	13%	55%	1
5	9%	40%	1
6	5%	30%	1
7	0%	Stop	–

• Only Image

Mode	DUTY	PrintSpeed	Pass
1	100%	100%	1
2	87%	85%	1
3	30%	70%	1
4	13%	100%	2
5	9%	80%	2
6	5%	50%	2
7	0%	Stop	–

- When the temperature is between 118°C and 125°C, the mode switches sequentially to higher level. When the temperature falls below 116°C, the mode switches to lower level.
- When the temperature exceeds 125°C, printing will stop.
- When temperature gradient is steep, higher mode shall be specified directly.

(b) SP motor overheat alarm

The voltage of the output SPTEMP signal of the thermistors, one of which is contained in the SP Motor, is monitored by the A/D port of the SOC to control the voltage.

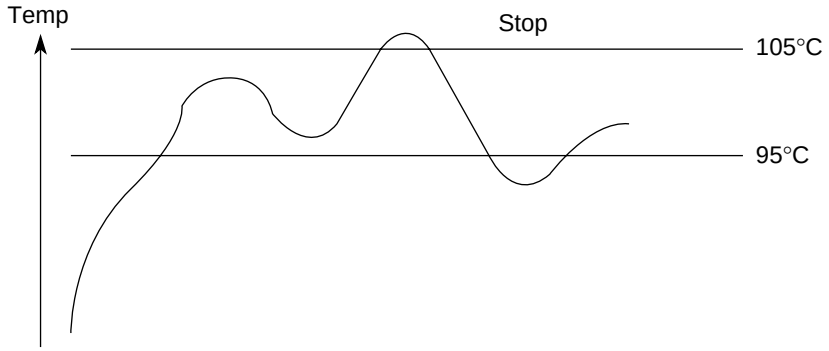

Mode and print control

Mode	Temp	PrintSpeed
1	~ 94°C	100%
2	95°C ~ 104°C	50%
3	105°C ~	Stop

- When the temperature exceeds 105°C, printing will stop.

2.1.9 Power Supply Unit

This power supply unit is a switching power supply. This power supply unit supplies the +5VDC, +40VDC.

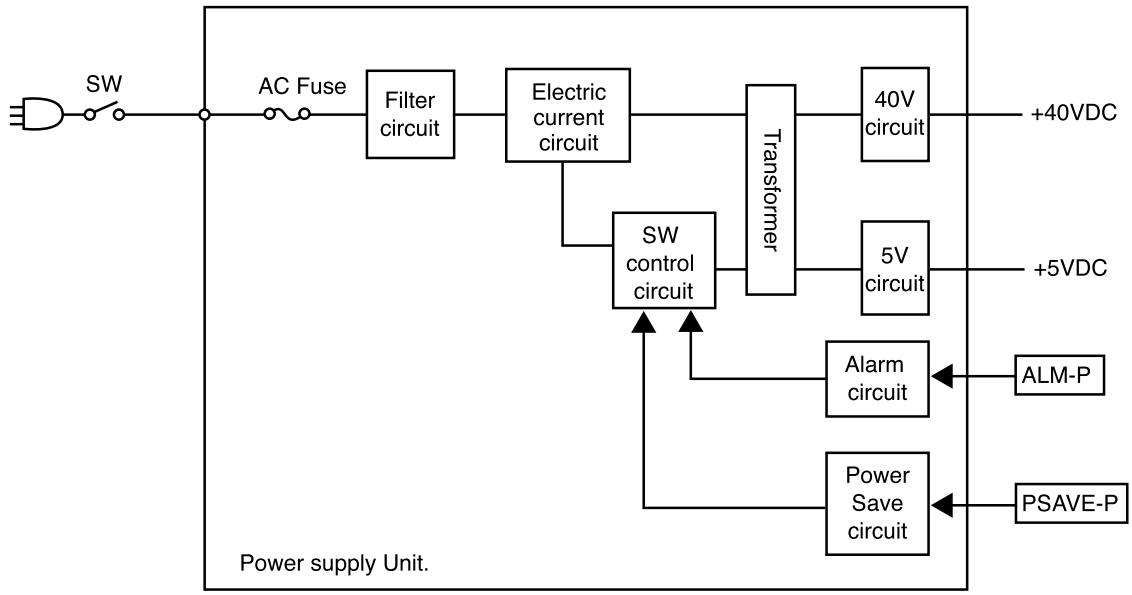

The uses of output voltages and signals are described below.

Voltage/signal	Use
+5V	Logic IC / LED drive / SENSOR drive
+40V	LF motor / SP motor drive / Printhead / FAN drive

Various protective functions in the power supply unit:

(1) +40V overcurrent detection function

When an overcurrent has been detected, this function suspends switching and cuts off all output.

This state in which all output is cut off is maintained.

Recovery takes place when the power supply is resumed about 30 seconds after turning off the power switch.

Until the cause of the overcurrent is removed, even if the power supply is resumed this function operates so that no +40V/+5V output occurs.

(2) +5V output overcurrent detection function

When an overcurrent has been detected, this function lowers the voltage for this output only.

Voltage is restored when the cause of the overcurrent is removed.

(3) +40V and +5V output overvoltage detection function

When voltage rises above the standard value of +40V or +5V, this function suspends switching and cuts off all output.

This state in which all output is cut off is maintained.

Recovery takes place when the power supply is resumed about 30 seconds after turning off the power switch.

Until the cause of the overvoltage is removed, even if the power supply is resumed this function operates so that no +40V/+5V output occurs.

(4) Alarm function (See 2.1.8)

When an ALM-P signal has been output from the control unit, this function suspends switching and cuts off all output.

This state is maintained after the power switch is turned off until the power supply resumes about 30 seconds later.

Until the cause of the output of the ALM-P signal is removed, even if the power supply is resumed this function operates so that no +40V/+5V output occurs.

(5) Protection against incorrect AC voltage input (See 3.3.21)

This power supply is a multi-input power supply. The power-supply voltage-setting pins can be used to set input at 100V or 200V. The power supply will not operate (i.e., no power will be supplied) when the power switch has been turned on with an incorrect setting for the AC input voltage used. In such a case, immediately turn off the power switch and change the settings to ones suited to the AC voltage used.

Operation during power saving

During power saving, a POWSAVE-P signal is output from the control unit to the power supply unit.

This signal decreases +40V voltage to approximately 20V to reduce power consumption.

When power saving is released, voltage is restored to +40V.

2.2 Mechanical Operation

2.2.1 Printhead Mechanism and Operation (See Figure 2-2.)

The printhead is a spring charged 9-pin driving head using a permanent magnet. It is attached to the carriage, which moves in parallel with the platen. Electrically, this unit is connected to the control circuits through the Main Control PCB.

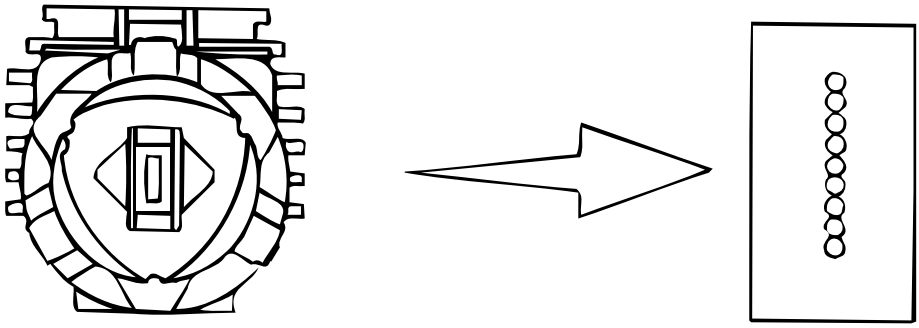

Figure 2-2 Arrangement of the Head Pins View from the Tip of the Printhead

(1) The printhead configuration:

The printhead is composed of the following parts:

(a) Wire guide

(b) Spring assembly (Wire, Armature, Spring, Yoke, Spacer)

(c) Magnet assembly (Magnet, core, coil, Yoke)

(d) Printed circuit board

(e) Fin

(2) Operation of printhead (See Figure 2-3.)

(a) When the printhead is idle, the armature is attracted by a permanent magnet and the spring fixing the armature is compressed. The print wires fixed to each armature are thus concealed under the wire guide.

(b) When a signal for a character to be printed is detected, a current flows through the coil. When the coil is activated, the magnetic flux (caused by the permanent magnet between the armature and the core) is canceled to eliminate the attraction force. The armature is driven in the direction of the platen by the force of the armature spring. The print wire fixed to the armature protrudes from the tip of the wire guide, strikes the paper through the ribbon and prints a dot on the paper.

(c) After the character has been printed, the armature is magnetically attracted again and the print wires are again concealed under the wire guide.

A thermistor in the printhead prevents burning caused by over-heating of the coil during extended continuous bi-directional printing. When the temperature of the coil exceeds a pre-determined limit the control circuit detects a thermistor signal. Printing will then be intermittent or stop completely until the coil temperature falls below the limit value.

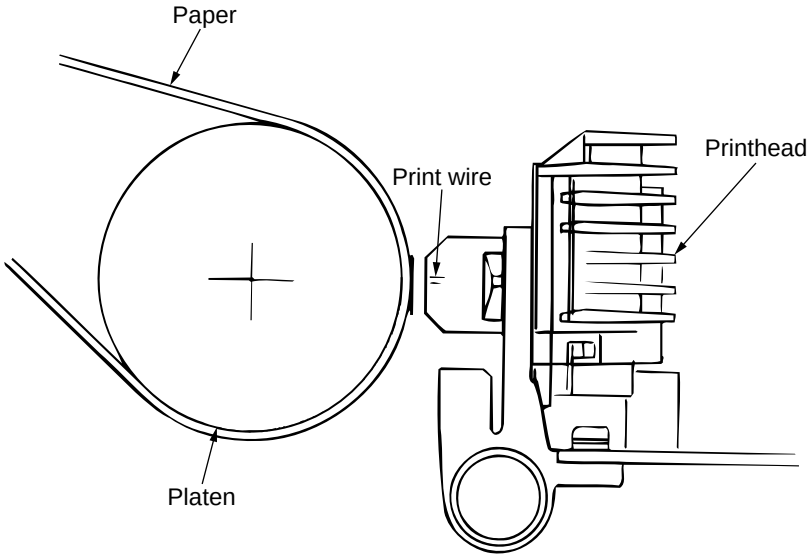

(1) When printing

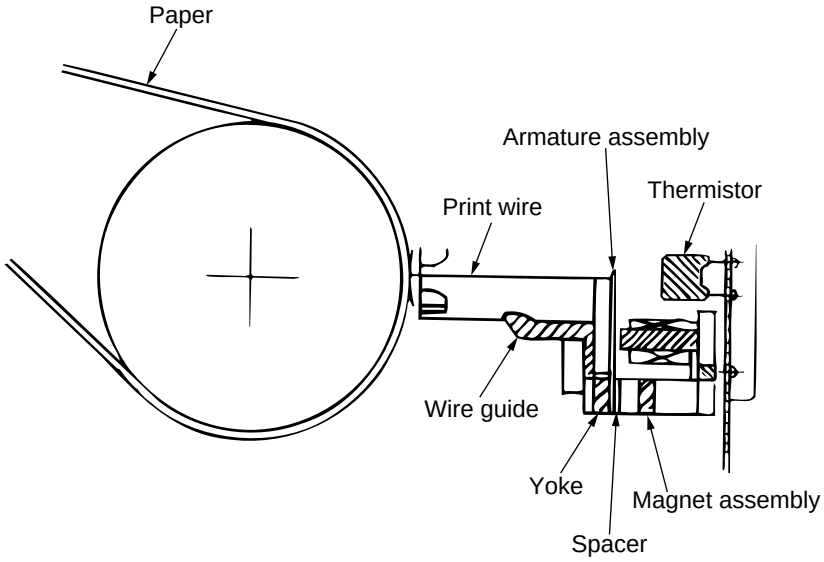

(2) When not printing

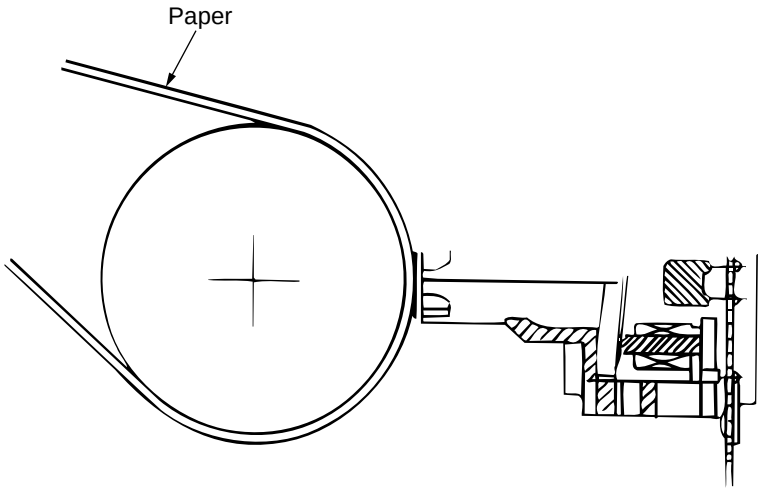

Figure 2-3

2.2.2 Spacing Operation (See Figure 2-4.)

The spacing mechanism consists of a carriage shaft mounted in parallel with the platen, and a carriage frame that moves along the shaft. It is driven by a DC motor mounted on the bottom of the carriage frame. Items included in the spacing mechanism are as follows:

(a) DC motor with motor gear

(b) Carriage frame (stationary yoke and motor driver board included)

(c) Carriage shaft

(d) Space rack

(e) Sensor

(f) Encoder disk

(1) Spacing operation

The carriage frame, on which the printhead and space motor are mounted, moves along the carriage shaft in parallel with the platen. When the spacing motor rotates counterclockwise, the driving force is transmitted to the motor gear. As the motor gear rotates, the carriage moves from left to right.

Mechanically, it is designed in such a way that for every revolution of the DC motor, the carriage frame moves 0.8 inch (20.32 mm).

At the same time the encoder disk rotates together with the motor and passes the sensor. The position of the carriage frame can be determined by counting the interrupts detected by the sensor.

In the same way, the rotation of the space motor can be recognized and controlled by measuring the cycle of interrupts detected by the sensor.

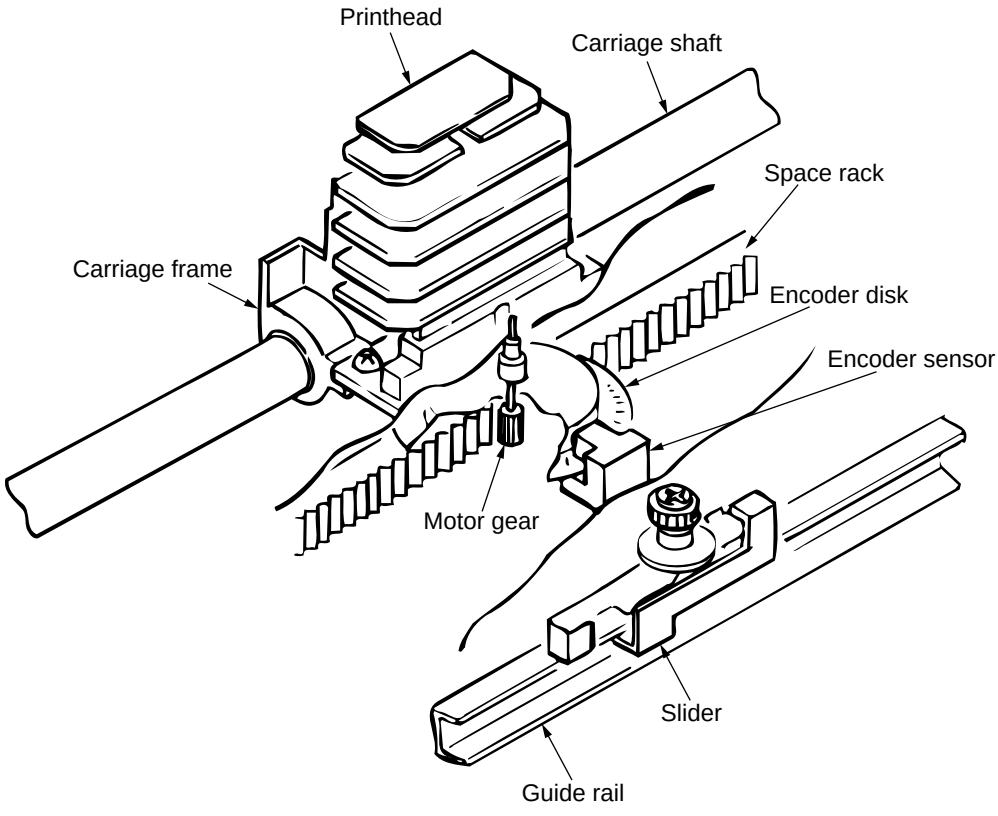

Figure 2-4

2.2.3 Head Gap Adjusting (See Figure 2-5.)

The head gap adjusting lever moves back and forth to tilt the carriage frame, altering the gap between the printhead and the platen.

The adjusting screw, which is connected to the adjusting gear rotates when the adjusting lever is moved creating a fine gap adjustment. If the adjusting gear is pushed down, the adjusting screw can be turned with a screw driver to change the coarse gap adjustment.

When the adjusting lever is set to range ② ~ ⑤ the contact which is attached to the under side of the carriage cover will connect with the contact of the space motor PC board. The printer will reduce the printing speed automatically to ensure that adequate printing pressure is maintained for multipart paper.

And, the adjusting cam adjusts the headgap toward left and right side in accordance with the guide rail up and down as a position of the left end of it.

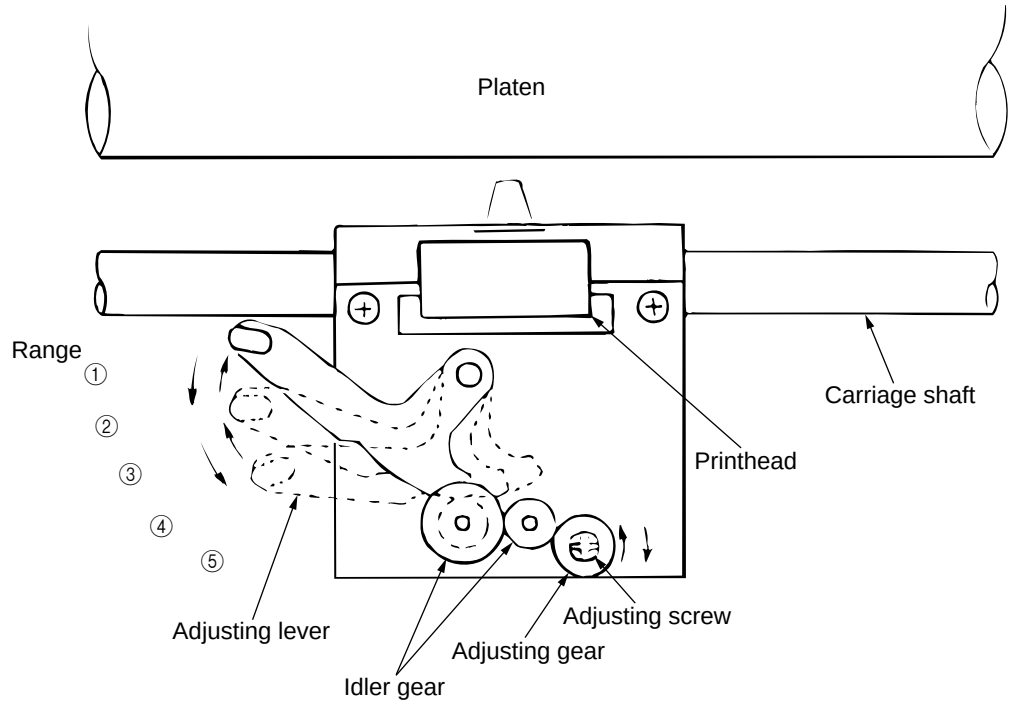

Range from ⑤ to ①

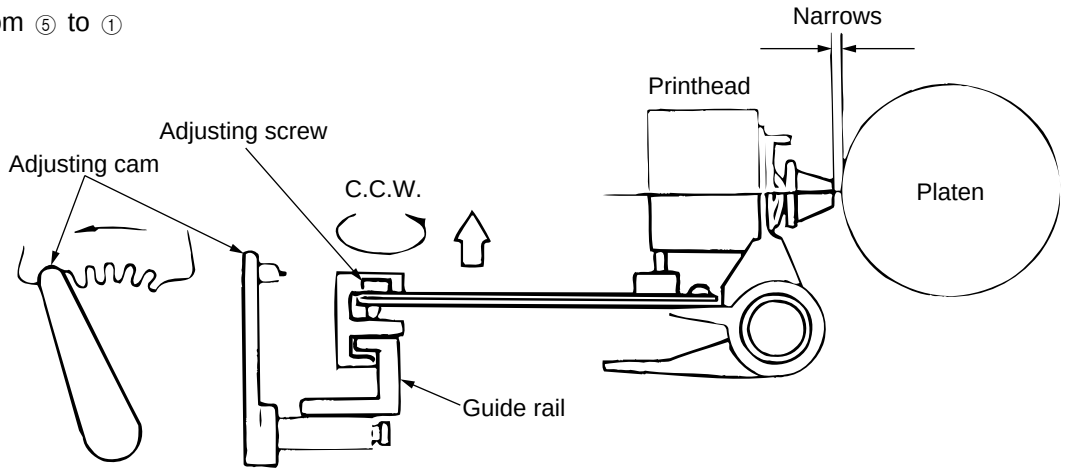

Range from ① to ⑤

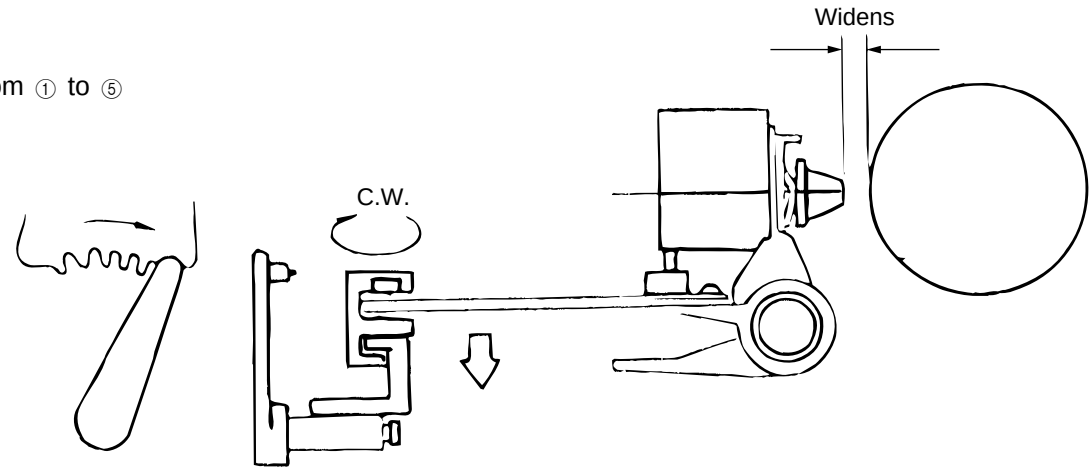

Figure 2-5

2.2.4 Ribbon Drive (See Figure 2-6.)

The ribbon driver mechanism moves the ribbon in synchronization with the space motor operation.

The ribbon drive mechanism consist of the following items:

(a) Ribbon drive gear assembly

(b) Ribbon gear (space motor)

(c) Ribbon cartridge

(1) Ribbon cartridge

An endless ribbon with a single direction feed is used. Ink is supplied from an ink tank, which is built in to the ribbon cartridge.

(2) Ribbon feed operation

When the space motor is activated, the ribbon gear rotates. The rotation is transmitted via the ribbon drive gear assembly to the drive gear in the ribbon cartridge, thus moving the ribbon.

The feed direction of the ribbon is maintained by switching the rotational direction of the gears in the ribbon drive gear assembly. This ensures ribbon movement when bidirectional printing is used.

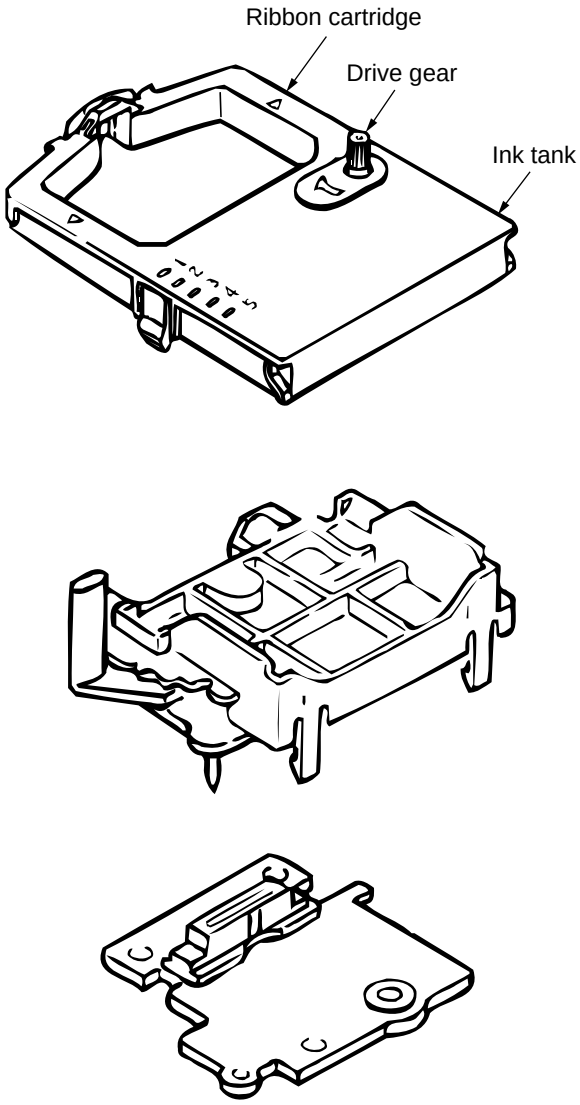

Figure 2-6

2.2.5 Paper Feed Operation

Feeding of the paper is performed by turning the platen and the pin tractor, which is driven by the LF pulse motor.

Item of the paper feed mechanism are as follows:

(a) Pulse motor with gears

(b) Decelerating gear

(c) Platen

(d) Tractor feed unit

(e) Pressure roller

(1) Cut sheet and continuous sheet switching mechanism (See Figure 2-7.)

Three different paper paths can be selected and set by the change lever.

(a) TOP (for cut sheet)

When the cut sheet is used in the manual mode or fed by the CSF (option), set the change lever at the position marked TOP.

[Operation]

The driving force of the platen gear (R) is transmitted to the idle gear by setting the change lever to the TOP position. However, this causes the idle gear to be disengaged from the change gear, leaving it free.

At this time, the pressure rollers (at the rear and the front) are pressed securely to the platen to feed the cut sheet. At the same time, the switch lever positions between the rear switch and bottom switch, to confirm to the Main Control PCB that you are in the cut sheet mode.

In the cut sheet mode, the Main Control PCB automatically feeds the sheet up to the print start position after pausing for the wait time stored in the menu.

(b) REAR (Continuous sheet from push tractor)

When the change lever is set to REAR position, the change gear is engaged with the idle gear and the tractor gear to transmit the rotation of the platen to the push tractor shaft, and the continuous sheet is fed from the push tractor.

At the same time, the switch lever turns on the rear switch, to confirm to the Main Control PCB that you are in the continuous sheet mode.

(c) BOTTOM (Continuous sheet from bottom feeder) (option)

When the change lever is set in the BOTTOM position, the rotation of the platen is transmitted to the drive gear of the bottom tractor feed unit through the idle gear to feed the sheet which has been set in the bottom tractor feed.

At the same time, the switch lever turns on the bottom switch, to confirm to the Main Control PCB that you are in the continuous sheet mode.

Correlation in Mechanism

Mechanism / Lever Position	Rear Switch	Bottom Switch	Idle Gear	Change Gear	Tractor Gear	Sheet Insertion
TOP	OFF	OFF	Rotate	Stop	Stop	Manual/ automatic CSF: Operation SW or instruction
REAR	ON	OFF	Rotate	Rotate	Rotate	• Operation SW or • instruction
BOTTOM	OFF	ON	Rotate	Rotate	Stop	• Operation SW or • instruction

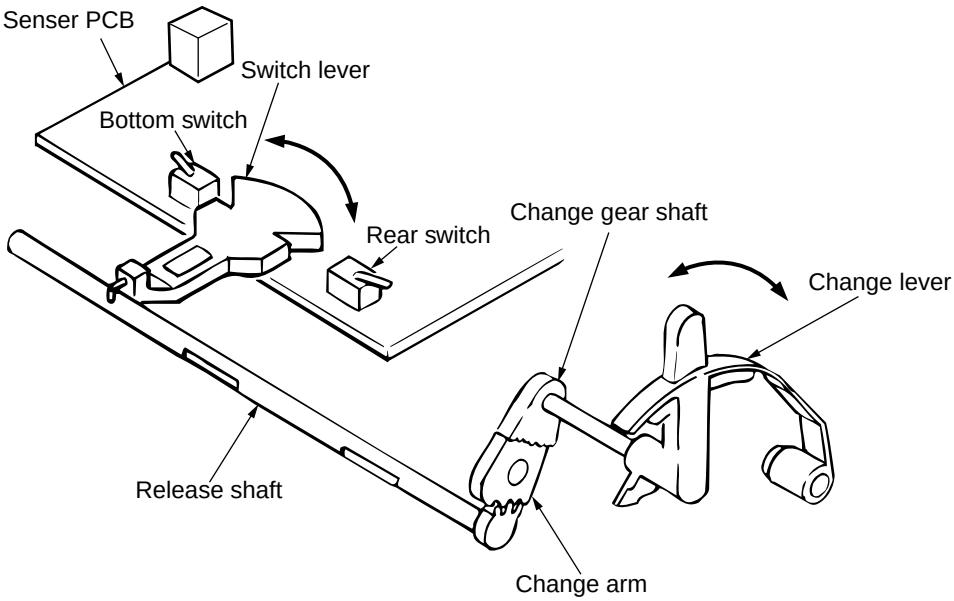
Senser PCB
Switch lever
Bottom switch
Rear switch
Change gear shaft
Change lever
Release shaft
Change arm

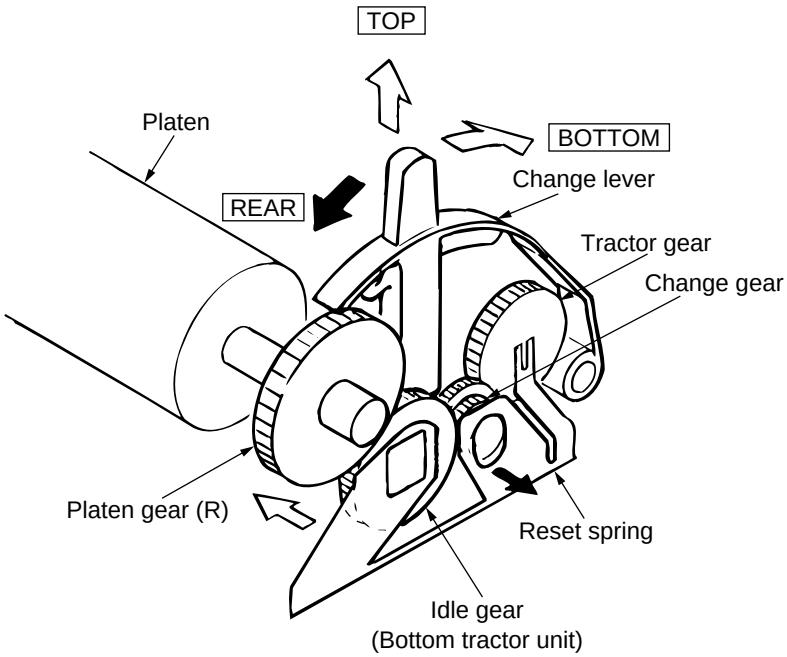
TOP
Platen
BOTTOM
Change lever
REAR
Tractor gear
Change gear
Platen gear (R)
Reset spring
Idle gear
(Bottom tractor unit)

Figure 2-7

(2) Cut-sheet feeder operation (See Figure 2-8.)

The pulse motor used for the paper feed mechanism is mounted on the left of the frame, and the rotation of the motor is transmitted through decelerating gears (LF idle gear, platen gear) to the platen. When using cut-sheet paper, the change lever must be in the TOP position to grab the paper, while disengaging the push tractor.

When the change lever is set to the TOP position, the cut sheet is automatically fed in up to the print start position after pausing for the wait time stored in the menu.

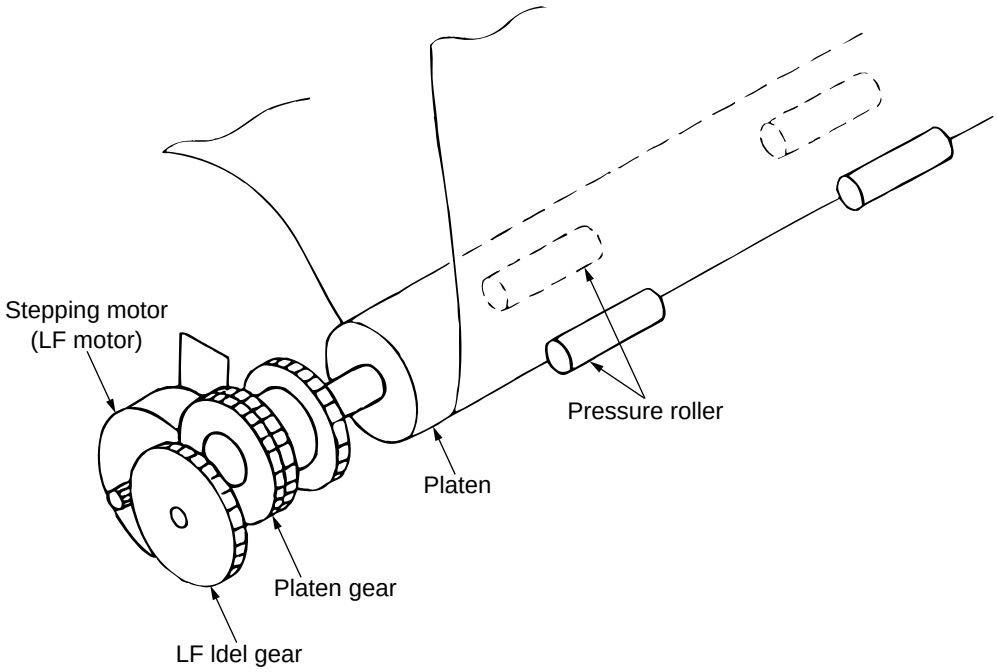

Figure 2-8

(3) Continuous paper feed operation (Rear) (See Figure 2-9.)

The force transmitted to the platen, rotates the tractor gear through platen gear, the idler gear and the change gear. The rotation of the tractor gear makes the pin tractor belt rotate through a sheet feeder shaft, feeding the continuous paper.

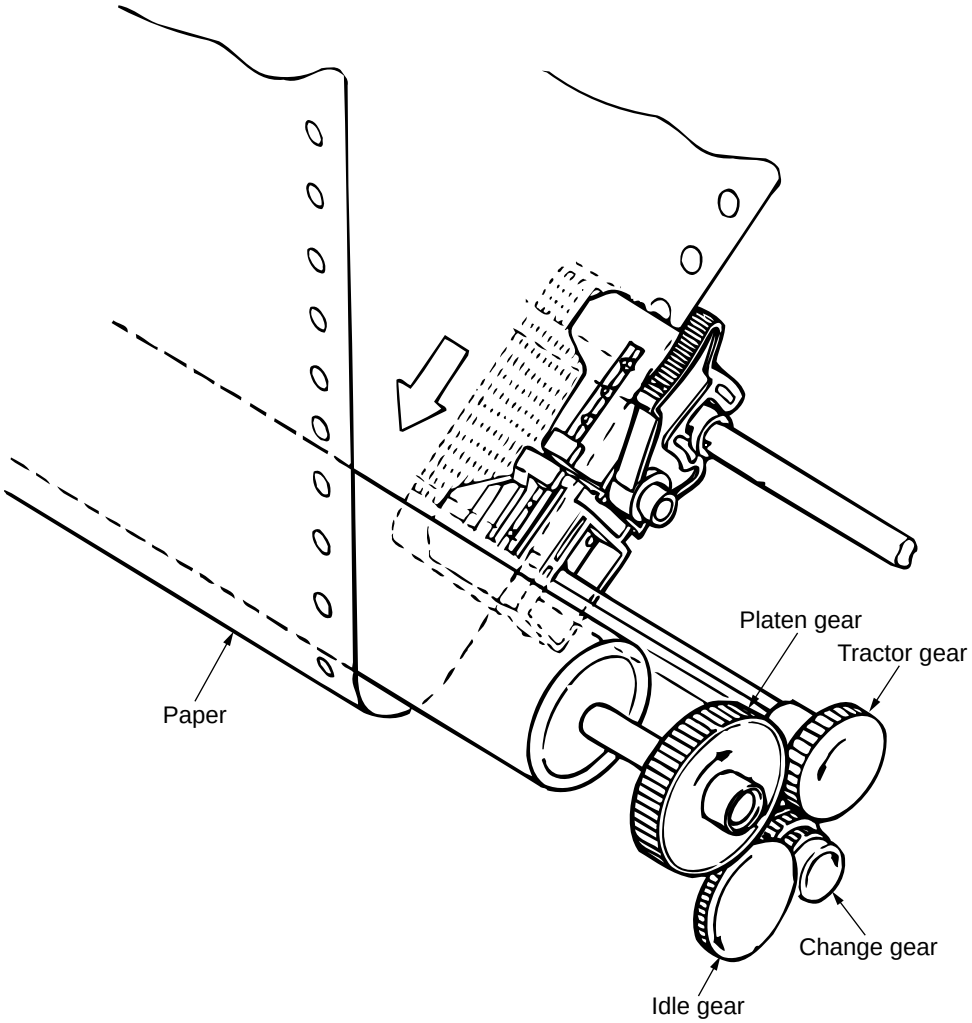

Figure 2-9

(4) Push and pull tractor mechanism (Option) (See Figure 2-10).

This mechanism consist of an optional pull tractor and a standard push tractor mechanism. This mechanism can perform forward and reverse feed by setting continuous sheets to the push tractor and pull tractor.

The rotation of the platen is transmitted to the push tractor and the pull tractor. Sheets are fed by these two tractors at the same time.

To remove slack from the sheets, set the sheets according to the following procedure when using the push and pull tractors.

① Set the change lever to the REAR position (setting the sheets to the push tractor to feed).

② Set the paper, which is fed in front of the platen, to the pull tractor.

③ Set the change lever to the TOP position and feed paper using the platen knob.

④ If paper slack is removed, set the change lever to the REAR position.

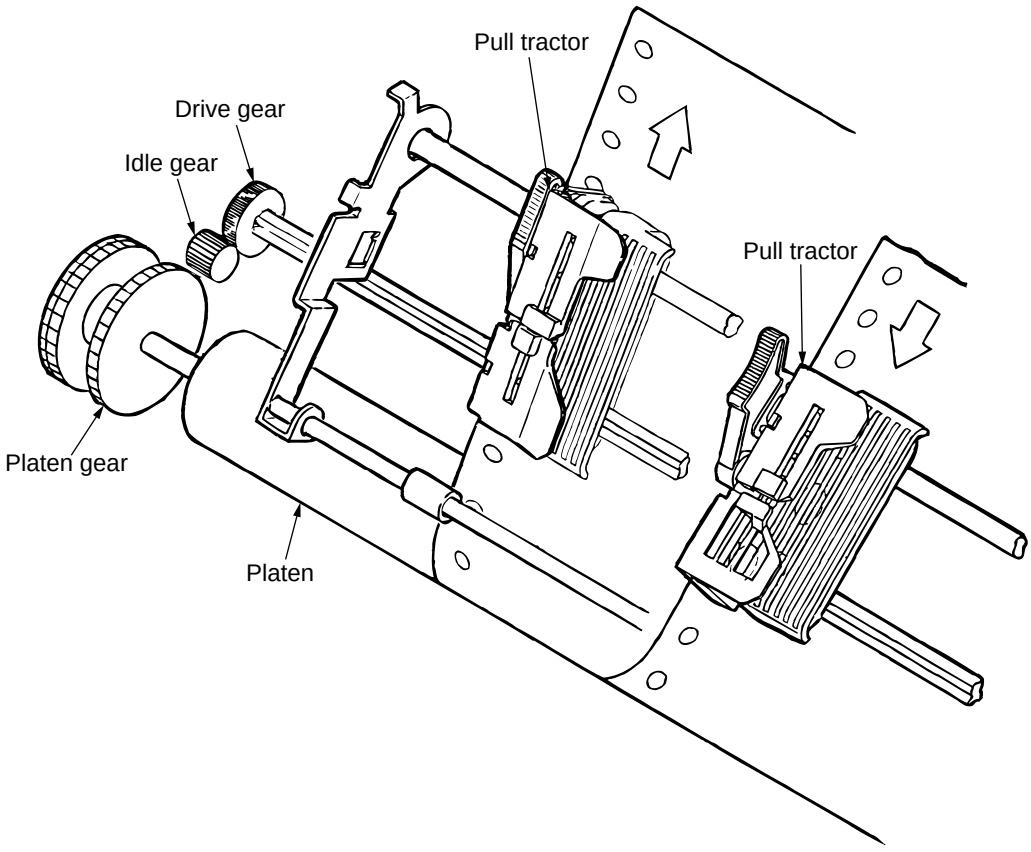

Figure 2-10

(5) Pull tractor mechanism (option) (See Figure 2-11.)

Bottom feed of continuous sheets is possible only when an optional pull tractor unit is installed.

The rotation of the platen is transmitted to the idle gear of the pull tractor unit through the platen gear at the left end of the platen. The rotation of the idle gear is transmitted to the drive gear, and continuous sheet forms are fed by the pull tractor being rotated through the sheet feeder shaft.

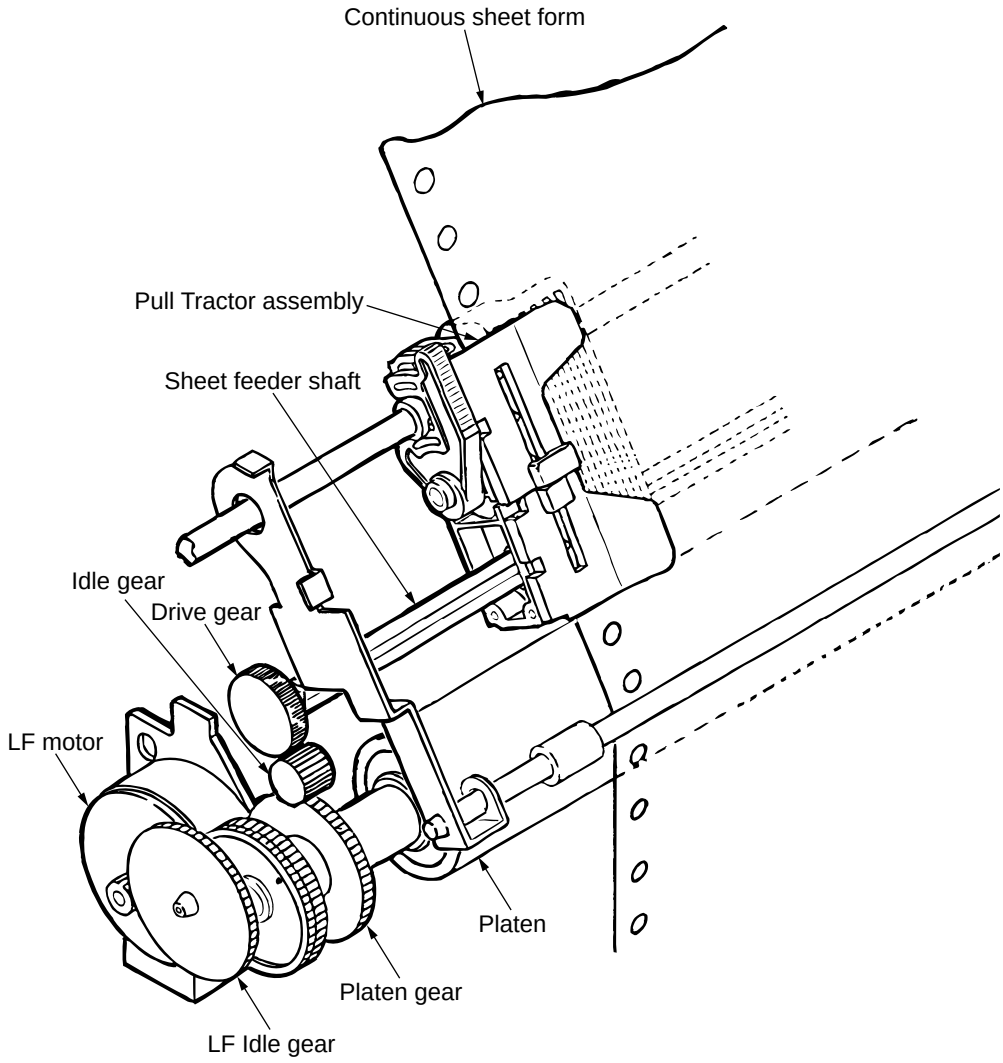

Figure 2-11

(6) Bottom push feed operation (Option) (See Figure 2-12.)

The bottom push feed of the continuous sheet is possible only when the bottom tractor feed unit is installed.

When the platen rotates, the rotational force of the platen is transmitted through the tractor idle gear and the tractor change gear to the tractor drive gear of the bottom push tractor, and the sheet of paper is fed in to the print start position.

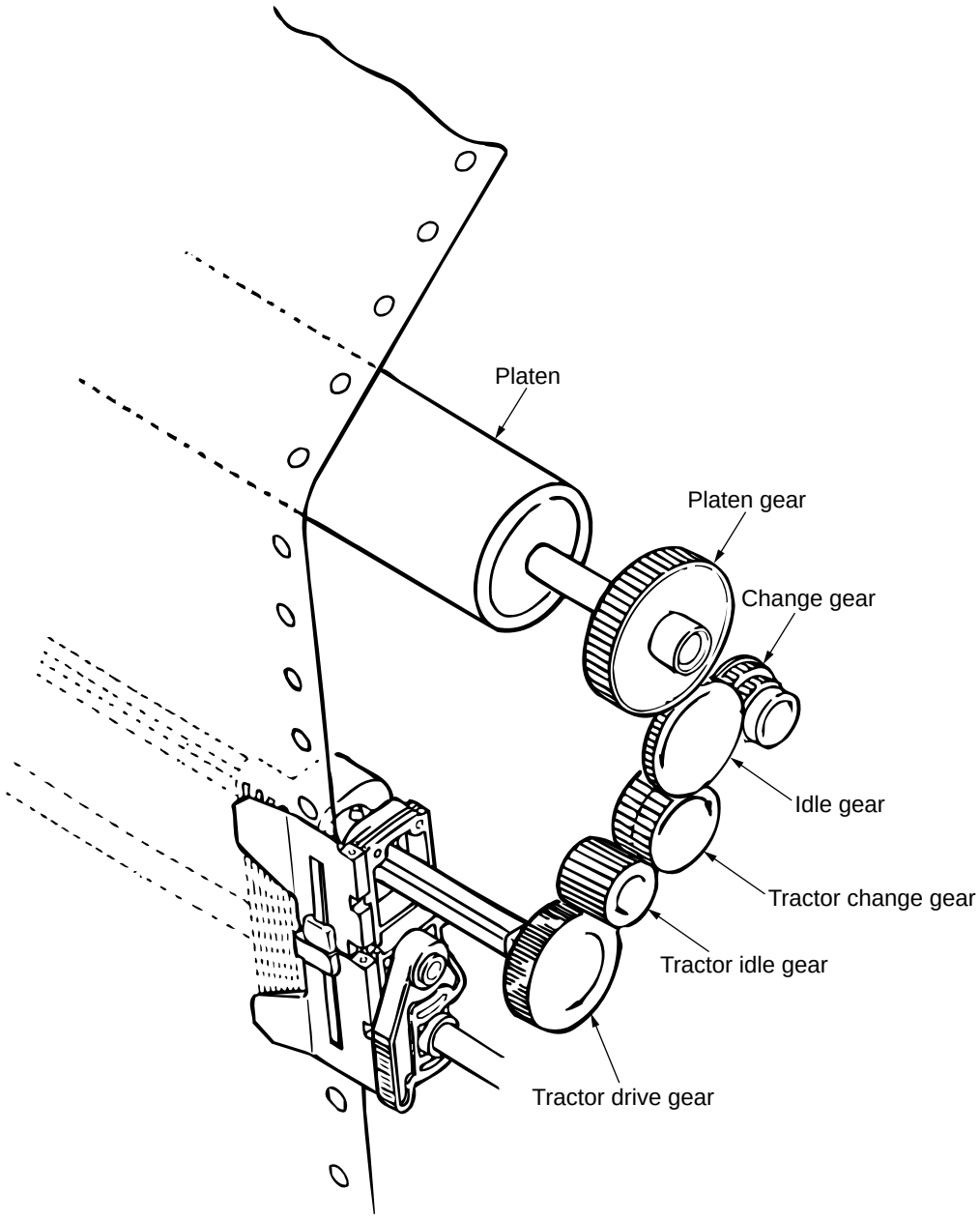

Figure 2-12

(7) Paper clamp mechanism (See Figure 2-13.)

When setting the change lever to the BOTTOM, TOP or REAR position, the operation of the front release gear arm changes according to the position of the release cam. And at the same time, the position of the cam installed to the front release gear shaft changes, and the open and close of the pressure roller.

Position of change lever	Open or close of front pressure roller	Open or close of rear pressure roller
BOTTOM	OPEN	OPEN
TOP	CLOSE	CLOSE
REAR	OPEN	OPEN

TOP

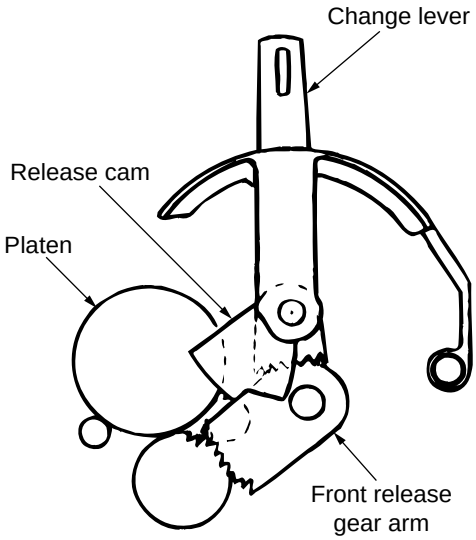

BOTTOM

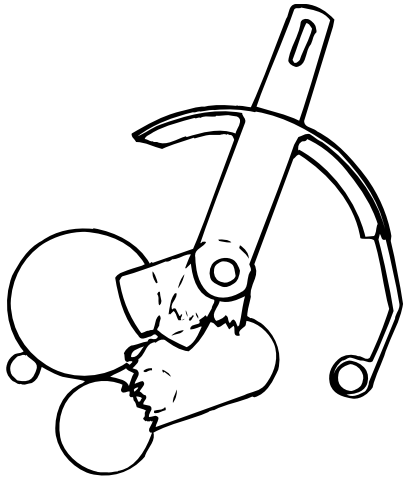

REAR

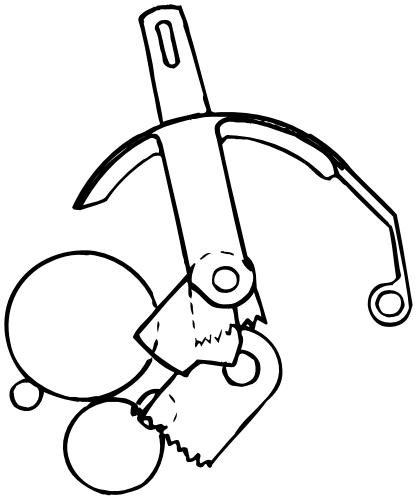

Figure 2-13

2.2.6 Paper Detection Mechanism (See Figure 2-14.)

(1) Cut sheet detection

When the cut sheet is inserted, the point A is pushed backward and the paper near end lever B rotates counter clockwise (CCW).

At this time, the rear sensor lever rotates counterclockwise (CCW), the rear sensor lever and pulls out of the rear and top paper end sensor to detect that the sheet is provided.

The procedure for the paper end is made in the reverse order, that is, its detection is performed when the paper end sensor is blocked.

(2) Rear feed detection

When the sheet is fed from the push tractor, the point B is pushed to the front side and the paper near end lever A rotates clockwise (CW). At this time, the rear sensor lever rotates counterclockwise (CCW), and pulls out of the rear and top paper end sensor to detect that the sheet is provided.

The procedure for the paper end is made in the reverse order, that is, its detection is performed when the rear sensor lever intercepts the sensor.

(3) Bottom feed detection

When the sheet is fed from the bottom, the point C rotates clockwise (CW). When the bottom sensor lever rotates clockwise (CW), it pulls out of the bottom paper end sensor to detect that the sheet is provided.

The procedure for the paper end is made in the reverse order, that is, its detection is performed when the bottom sensor lever intercepts the sensor.

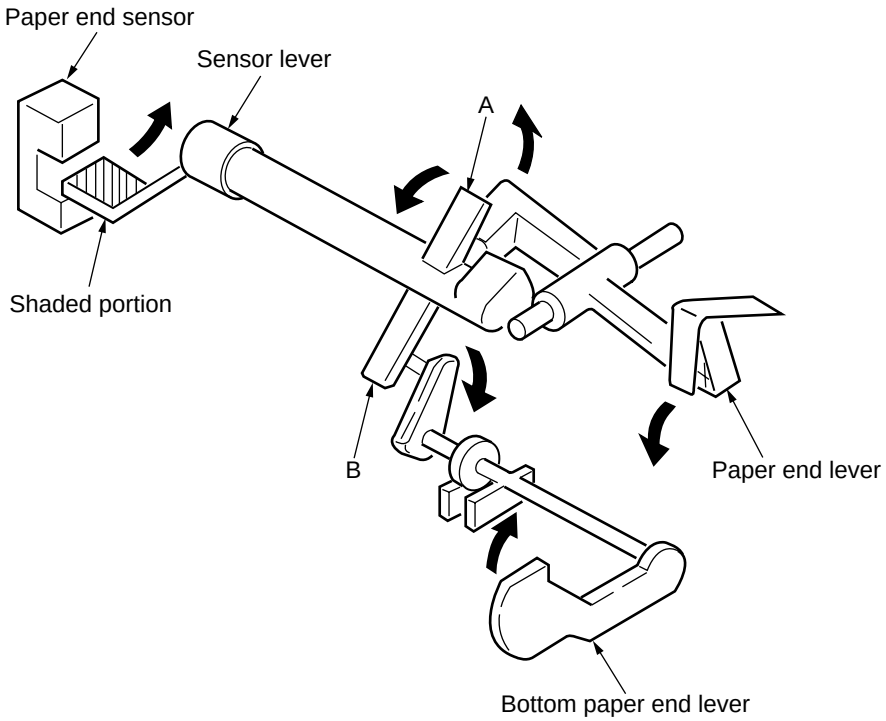

Figure 2-14

(4) Top line print mechanism (See Figure 2-15.)

The front edge of the sheet is protected by the ribbon protector so that it can stop at a position just near to the print head (0 tear off position) to start printing at the front end of the sheet, without causing the sheet to crumple or curl up.

The printing starts at the front end of the sheet, and continues uni-directionally until the front end of the sheet gets to the inside of the pull up roller cover.

After that, that printing continues bi-directionally.

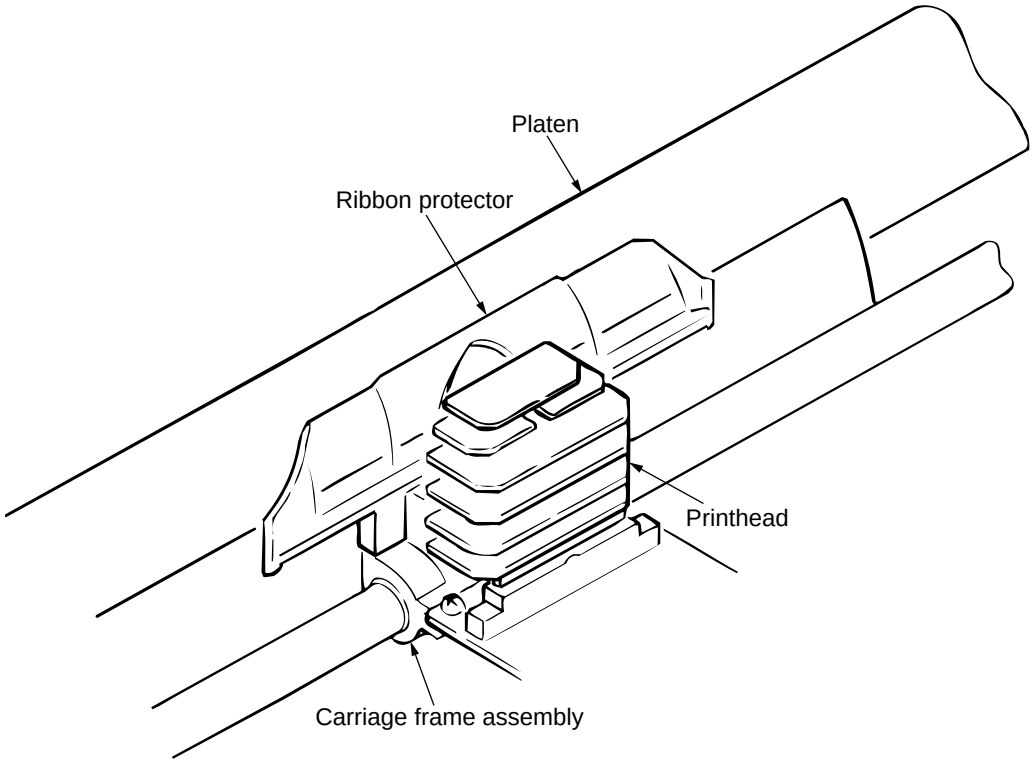

Figure 2-15

2.2.7 Automatic Sheet Feed

This function is used to feed in the sheet automatically up to the print start position when the cut sheet or the continuous sheet is used.

[Operational procedure]

(1) When using the cut sheet

1) Set the change lever to the TOP position. (See Figure 2-16.)

2) Insert a sheet of paper between the platen and the paper shoot.

3) After the lapse of time selected by the “wait time” in the menu, the LF motor starts its operation to feed the sheet of paper up to the print position.

4) When the default is selected, the sheet of paper is feed in up to the position 0.85 inches (first dot position) from the upper end of the sheet. However, the 0 tear off mechanism allows the printing at the front end of the sheet by changing the TOF position.

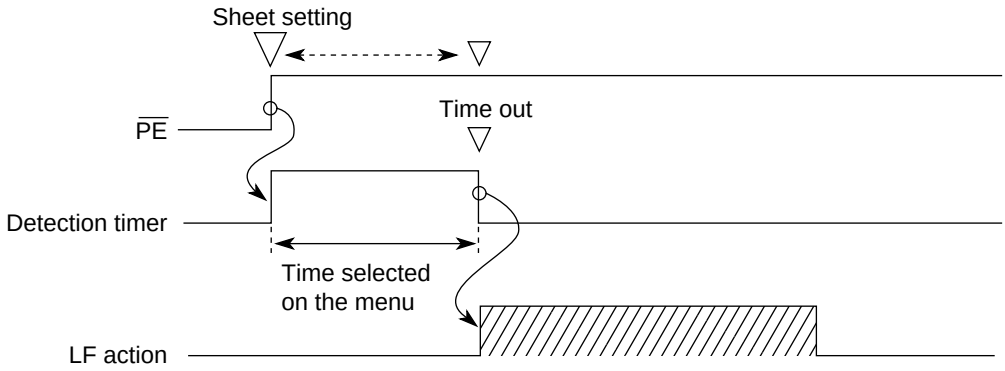

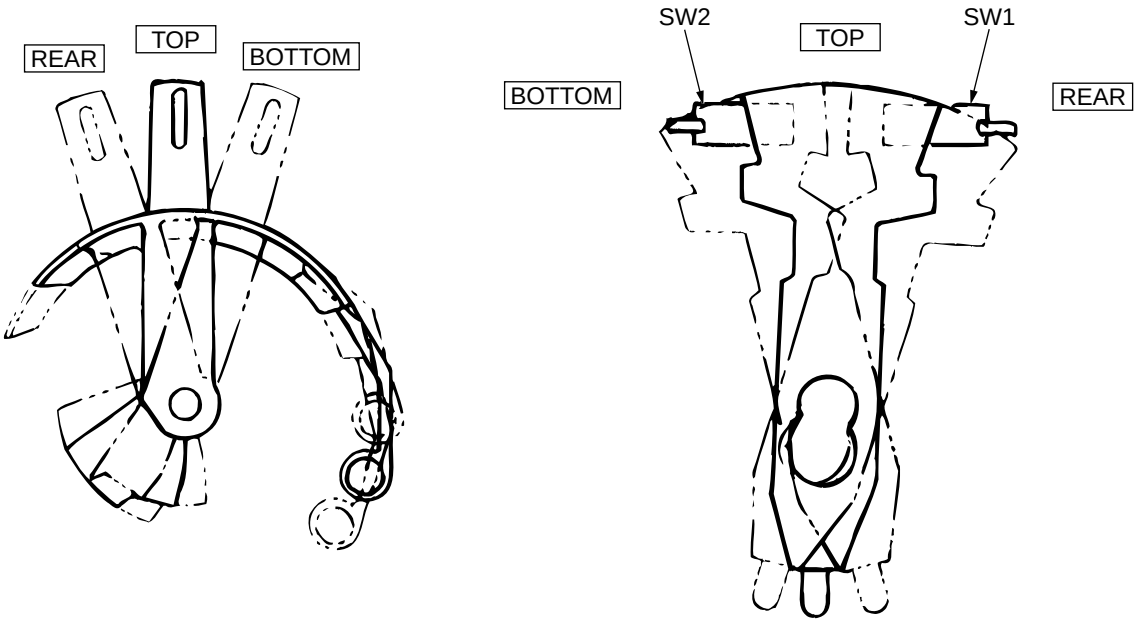

Figure 2-16

(2) When using the continouos paper

1) Set the change lever either to the rear side or the bottom side position. (See Figure 2-16.)
2) Set a sheet of paper either to the push tractor or the bottom tractor.
3) Press the “FF/LOAD” switch.
4) The LF motor starts its operation to feed the paper up to the print start position.
5) The paper is fed in up to the TOF position (Factory default: 0.85 inches from the top).

Push down the “FF/LOAD” switch.

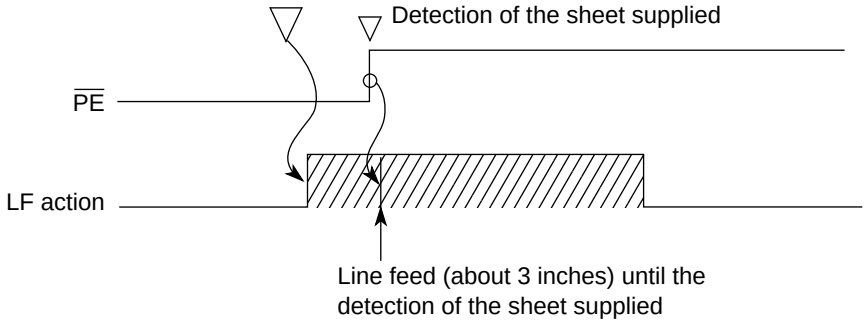

When the “FF/LOAD” switch is pushed down, the LF motor feeds in the sheet about 3 inches. When the LF motor completes the operation and the sheet has not been fed in, the feeding operating operation becomes, ineffective, thus resulting in the feeding jam.

2.2.8 Paper Park Function (Continuous paper)

Continuous sheets which have been inserted can be reversed automatically by using the “PARK” button on the operation panel.

1) Press the “PARK” button on the operation panel.
2) Reverse LF is started and paper is fed in reverse until paper end occurs or 19 inches maximum have been fed.
3) The paper is fed in reverse, to leave the paper on the push-tractor or bottom-tractor.

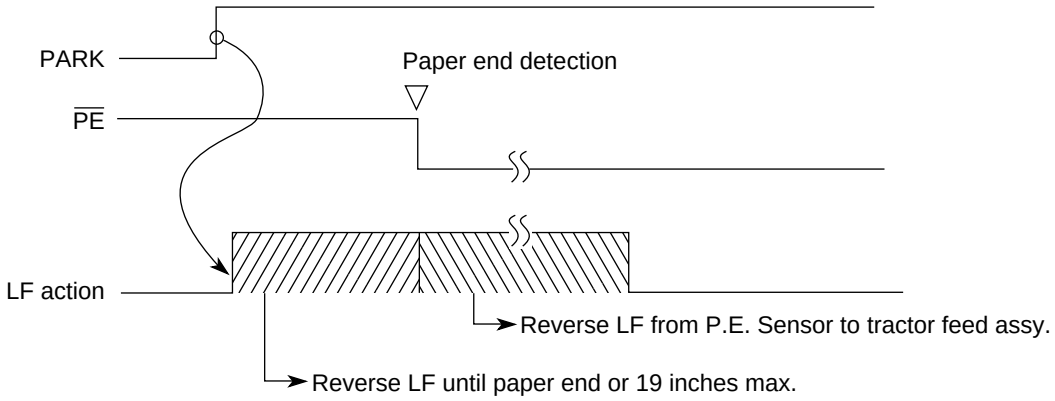

Alarm LED lights up when P.E. is not detected after 19 inches reverse feeding.

Operator can press SEL key to turn off the ALARM LED then press PARK key to continue park function.

This operation is required when the length of paper for parking is more than 19 inches.

3. ASSEMBLY/DISASSEMBLY

This section explains the procedures for removing and installing various assemblies and units in the field.

Description is mainly limited to the removal procedure; installation should basically be performed in the reverse sequence of the removal procedure.

3.1 Precaution for Parts Replacement

(1) Remove the AC cable and the interface cable before disassembling or assembling.

(a) Turn off the AC power switch. Remove the AC input plug of the AC cable from the receptacle. Remove the AC cable from the inlet on the printer.

⚠Warning	Risk of electric shock	

There is a risk of electric shock during replacement of the power supply.

Use insulating gloves or avoid direct contact with any conducting part of the power supply, and caution should be exercised during replacement.

The capacitor may take one minute to complete discharge after the AC cable is unplugged. Also, there is a possibility that the capacitor doesn't discharge because of a breakage of the PCB, etc., so remember the possibility of electric shock to avoid electric shock.

(b) To connect the AC cable again, connect it to the inlet on the printer first, then insert the AC input plug into a receptacle.

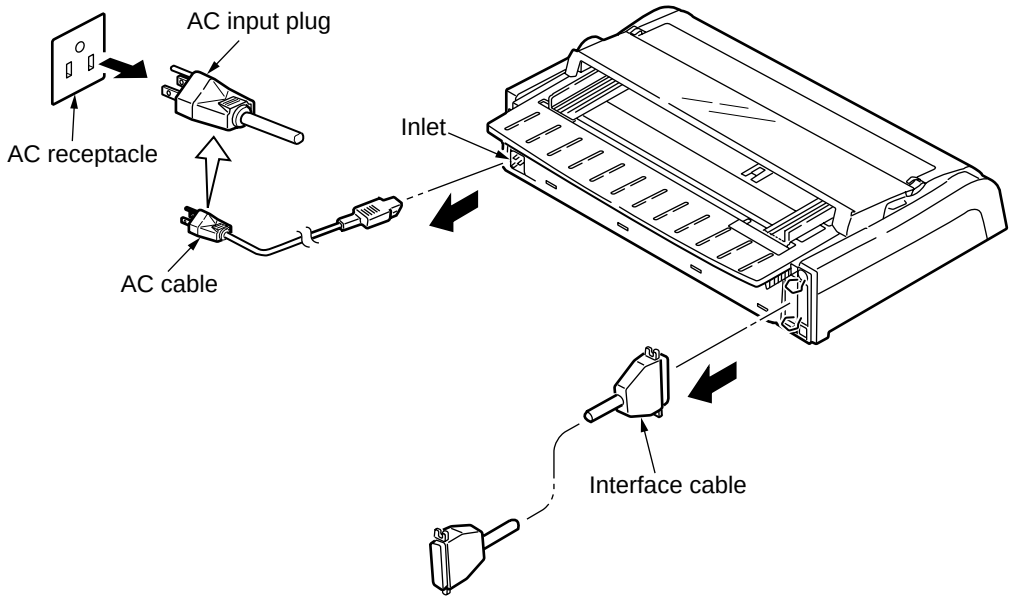

(2) Do not disassemble the printer as long as it is operating normally.

(3) Do not remove unnecessary parts, and limit the disassembly area as much as possible.

(4) Use the designated service tools.

(5) Carry out disassembly in the prescribed sequence; otherwise, damage to the parts may result.

(6) It is advisable to temporarily install screws, snap rings and other small parts in their original positions to avoid losing them.

(7) Whenever handling the PCB, do not use gloves which may cause static electricity.

(8) Do not place the printed circuit board directly on the equipment or on the floor.

(9) If adjustment is specified in the middle of installation, follow the instructions.

3.2 Service Tools

Table 3.1 lists the tools necessary for replacing printed circuit boards and parts of units in the field.

Table 3.1 Service tools

No.	Service Tool		Q'ty	Use	Remarks
1	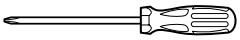	No. 1-100 Phillips screwdriver	1	Screws 2.6 mm	
2	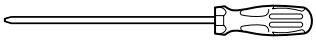	No. 2-200 Phillips screwdriver	1	Screws 3-5 mm	
3		No. 3-100 screwdriver	1		
4	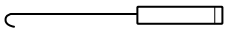	Spring hook	1		
5	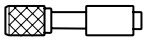	J-YX4025–83335-3	1	Head gap adjustment	
6	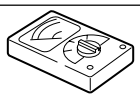	Volt/ohmmeter	1		
7		Feeler gauge	1	Head gap adjustment	
8	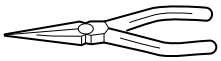	Pliers	1		
9	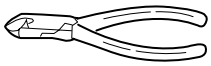	No. 5 nippers	1		
10		5N (500g) (1.1 lbs) bar pressure gauge	1		

3.3 Disassembly/Reassembly Procedure

This section explains the assembly replacement procedures according to the following disassembly system.

[Parts Layout]

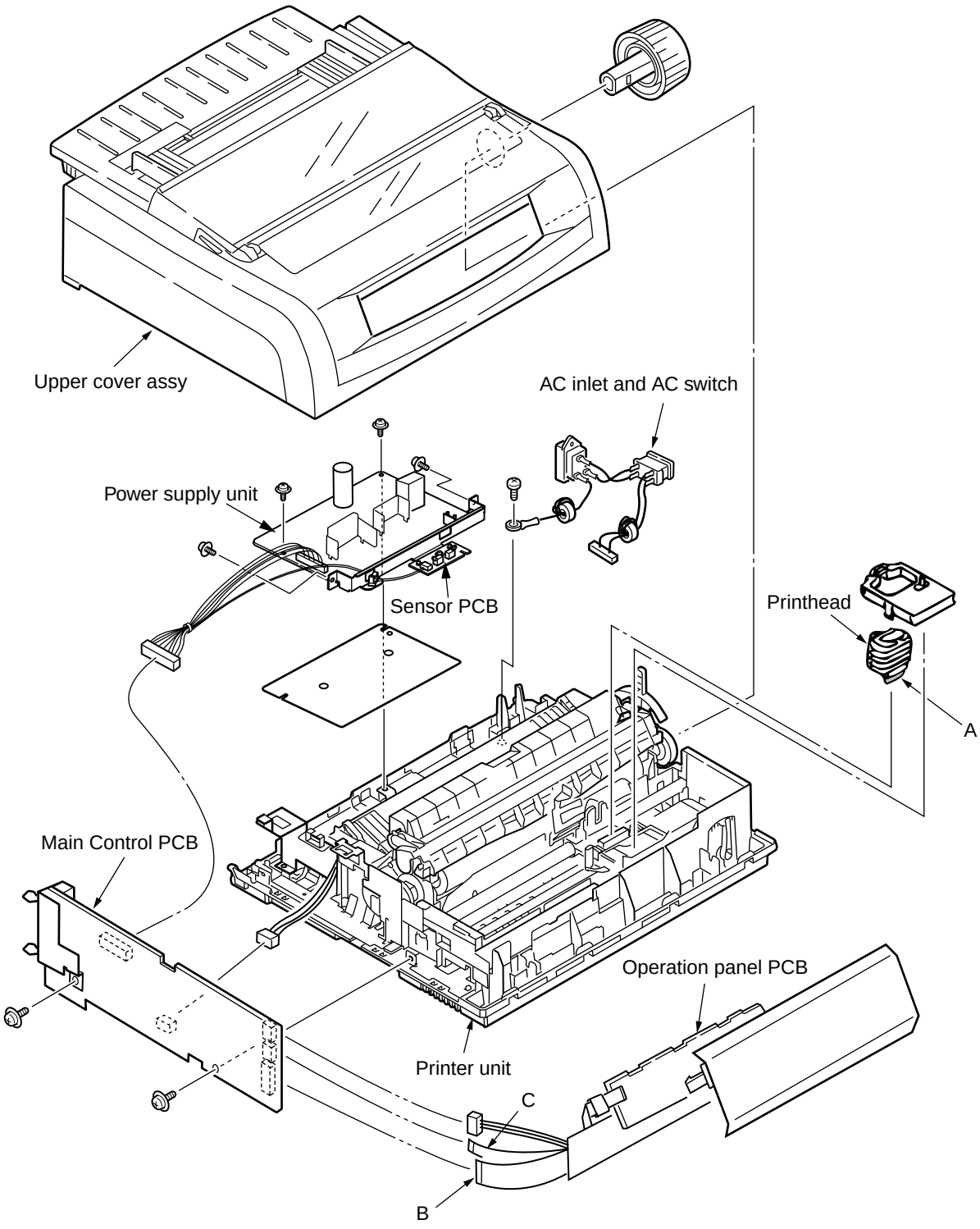

Figure 3-1 Printer unit

Notes on installation:

(1) Make sure that there is not any dust or oil on the connector contact sections A to C. If it is found, wipe it off by alcohol.

[How to Change Parts]

This section explains how to change parts and assemblies appearing in the disassembly diagram below.

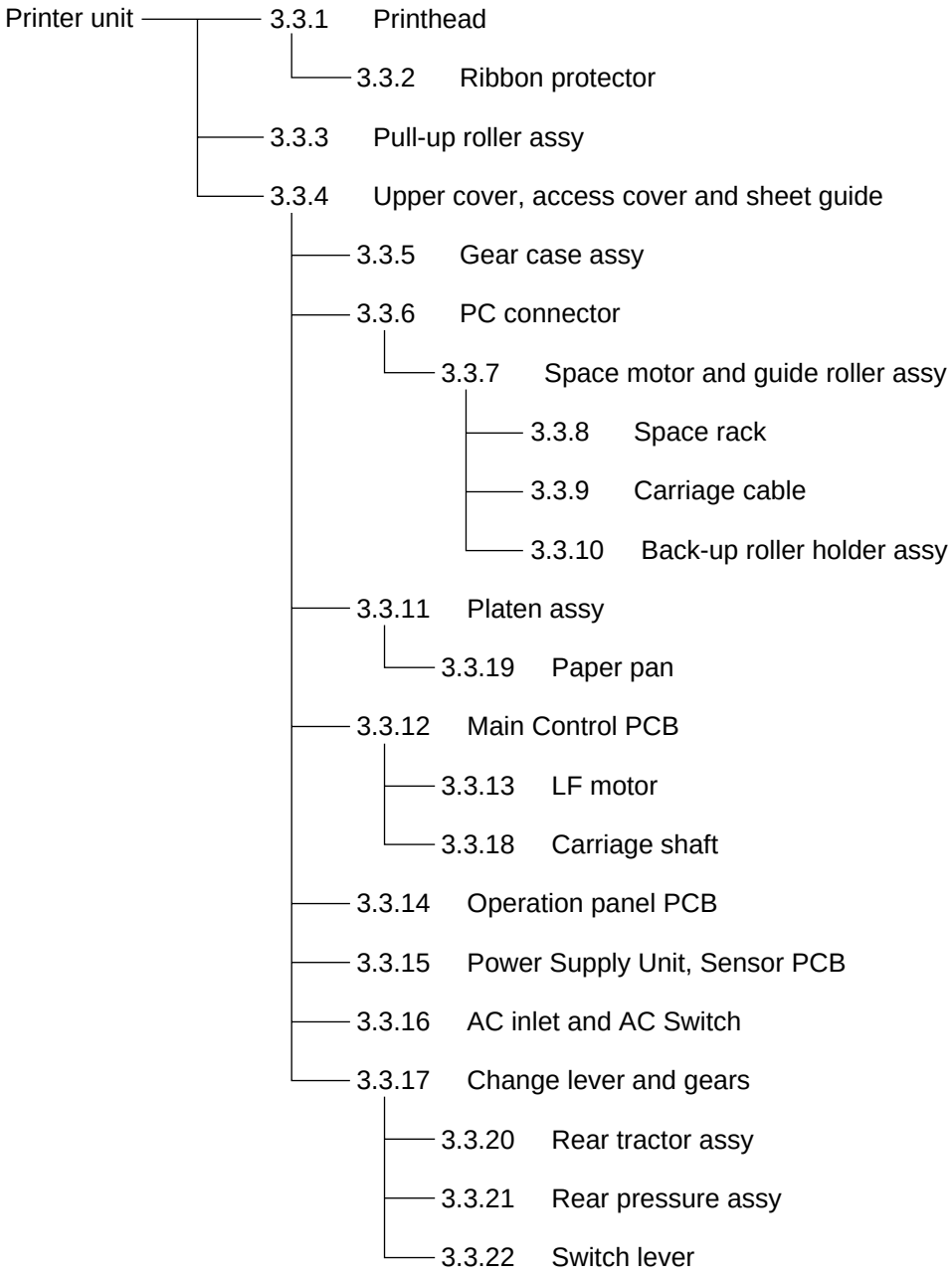

3.3.1 Printhead

(1) Open the access over.

(2) Pull up and rotate the head clamp ① to unclamp the printhead ② as shown fig. 3.3.1.

(3) Disconnect the printhead ② from PC connector ③.

(4) To install, follow the removal steps in the reverse order.

Notes on installation:

(1) Insert the printhead ② into the PC connector ③ while pushing it against the carriage frame ④.

(2) The head clamp ① must surely be sandwiched between printhead ② and carriage frame ④ as shown Figure 3.3.2.

(3) Be sure to check the gap between platen and printhead (see 4).

(4) Be careful not to touch the print head while it is very hot.

(5) Make sure that there is not any dust or oil on the connector contact section A. If it is found, wipe it off by alcohol.

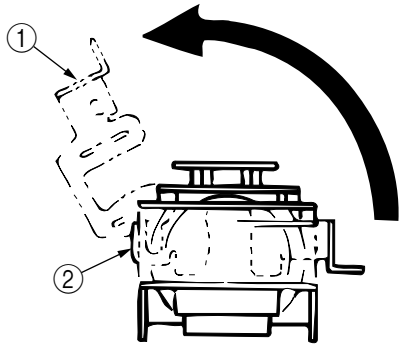

Figure 3.3.1

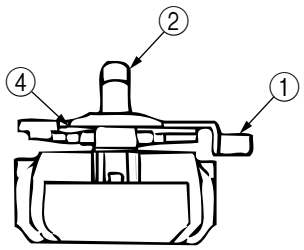

Figure 3.3.2

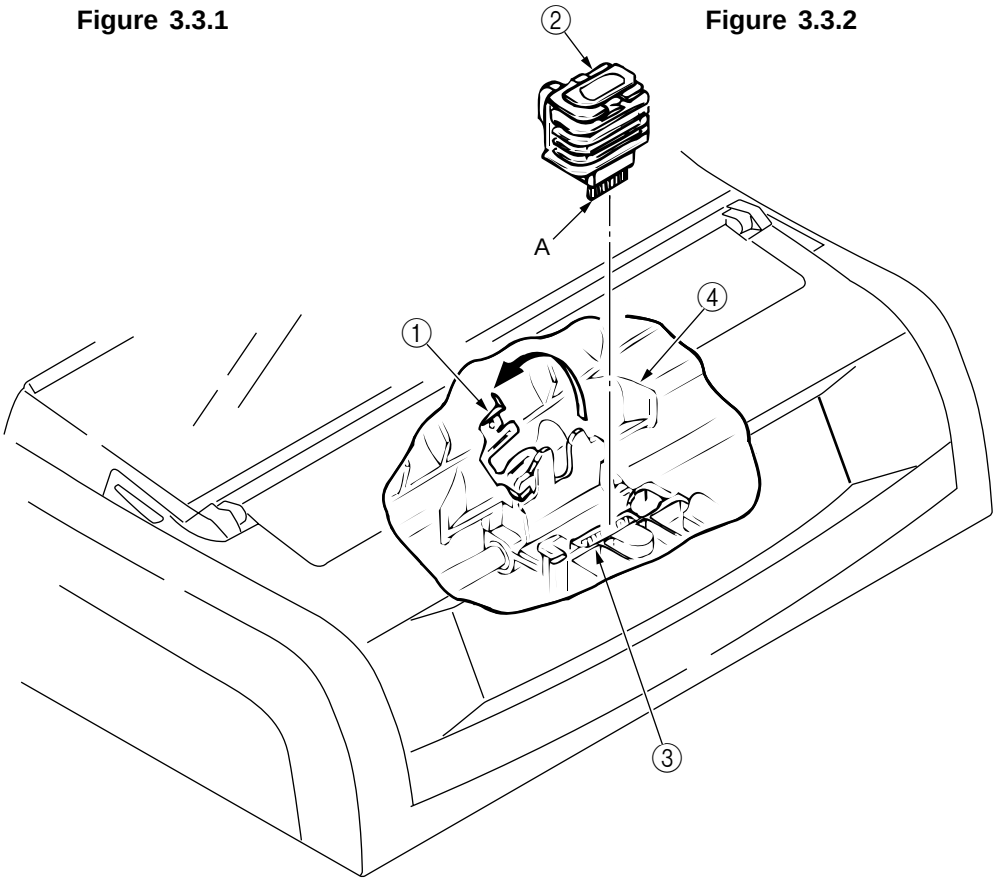

3.3.2 Ribbon Protector

(1) Remove the printhead (see 3.3.1).

(2) Open the pull-up roller cover ①.

(3) Raise and remove the ribbon protector ②.

(4) To install, follow the removal steps in the reverse order.

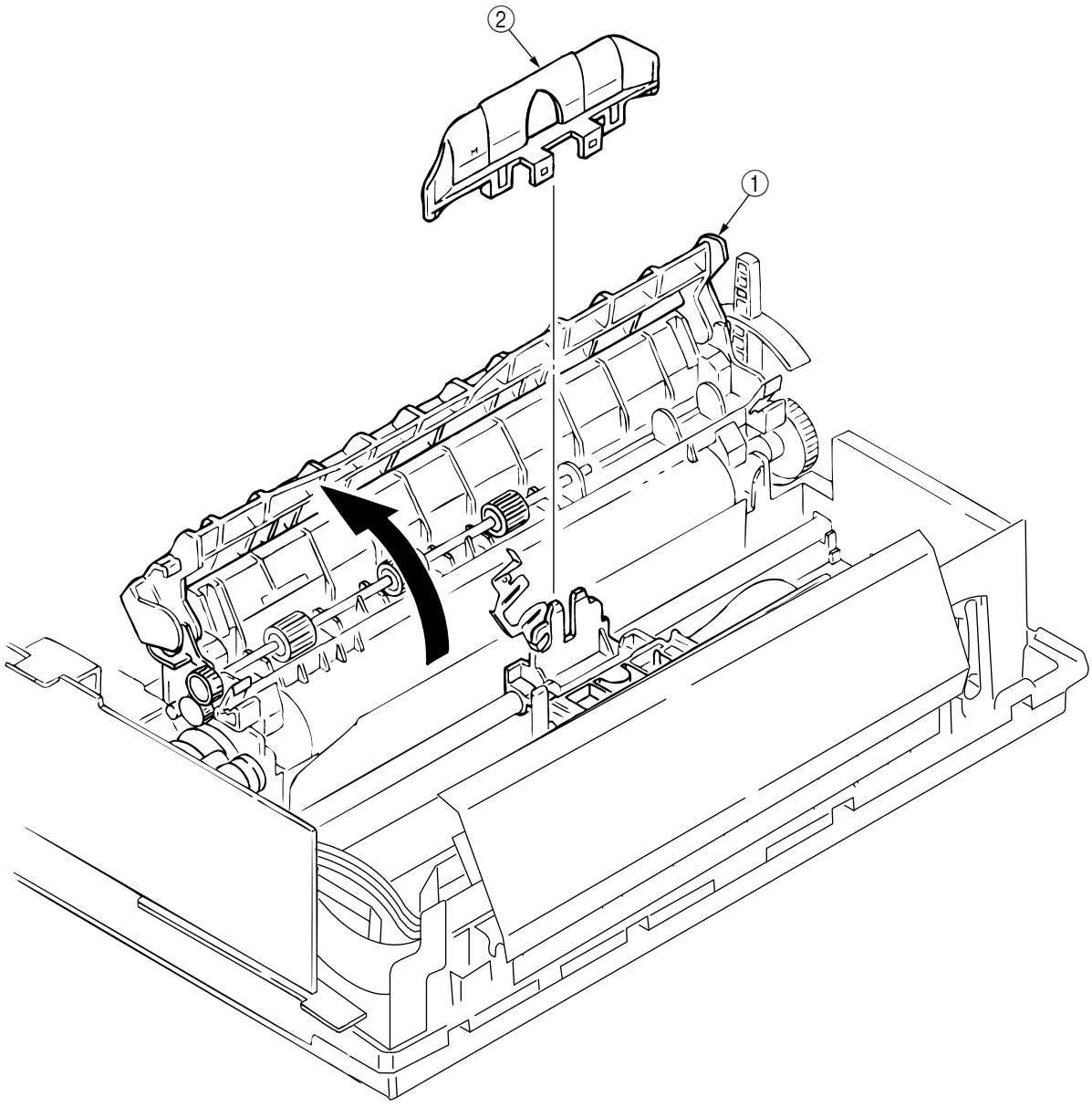

3.3.3 Pull-up Roller Assy

(1) Open the access cover ①.

(2) Lift up the sheet guide Assy ④ to remove.

(3) Tilting the pull-up roller Assy ② toward the front, remove from the shaft of platen Assy ③.

(4) To install, follow the removal steps in the reverse order.

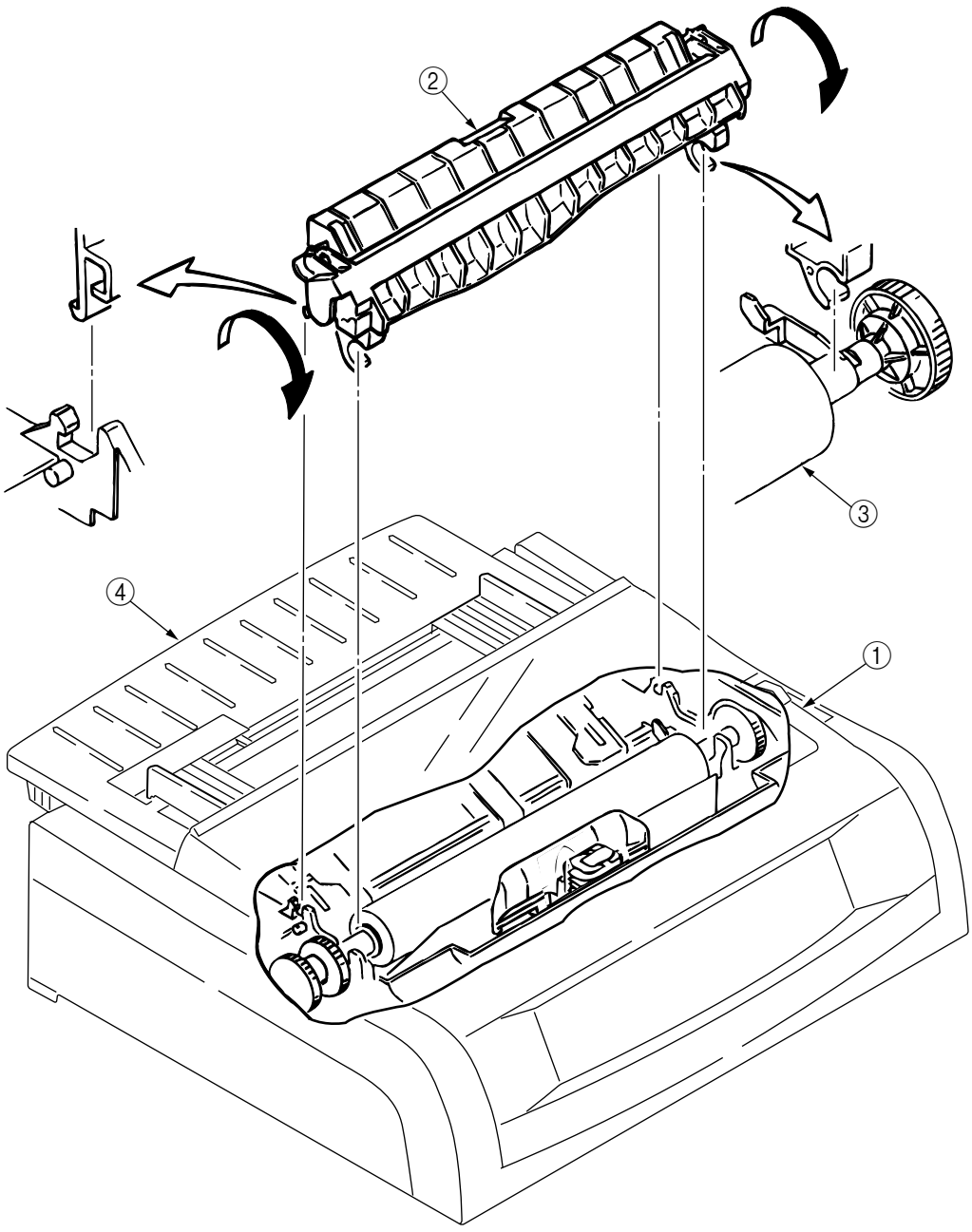

3.3.4 Upper Cover Assy, Access Cover Assy and Sheet Guide Assy

(1) Pull off the platen knob ①.

(2) Turn the change lever ② toward the bottom position.

(3) Insert a flat-blade screwdriver into grooves (5 places) (4 places for narrow type) of frame and twist to disengage claws of upper cover ③.

(4) Raise the front side of upper cover Assy ③ and shift toward the rear to disengage claws (6 places) (5 places for narrow type) of frame.

(5) Raise the upper cover Assy ③ to remove.

(6) Open the access cover Assy ④ toward the front to remove.

(7) Lift up the sheet guide Assy ⑤ to remove.

(8) To install, follow the removal steps in the reverse order.

Remark on assembly:

Match the posts Ⓐ at the both sides of the Sheet Guide ⑤ with the arrow marks on the upper cover. Push the Guide into the Cover.

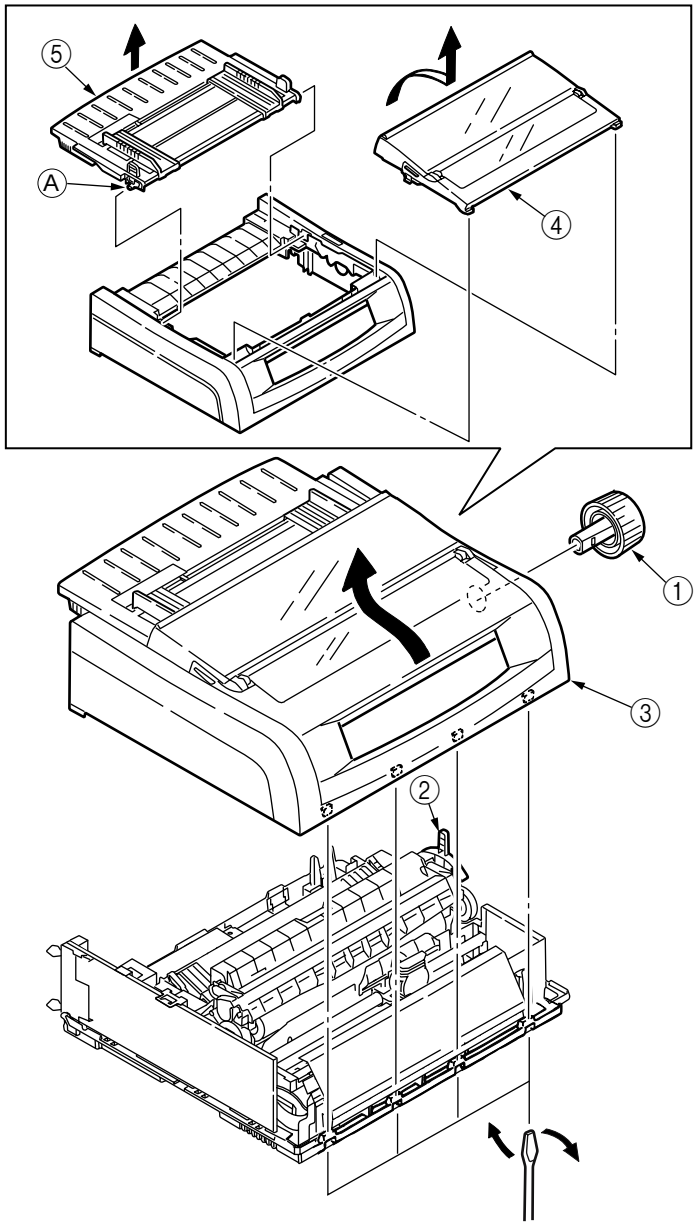

3.3.5 Gear Case Assy

(1) Remove the printhead (see 3.31).

(2) Remove the upper cover (see 3.3.4 (1) – (5)).

(3) Move the carriage Assy to right hand side, remove two screws ①, then the space motor ②.

(4) Disconnect a carriage cable.

(5) Disengage claws (4 places).

Using a flat-blade screwdriver, push to widen the claw for easy disengagement.

(6) Remove the gear case Assy ③ in upper direction and release the carriage cable from the cable clamp of the gear case Assy.

(7) To install, follow the removal steps in the reverse order.

Note on installation:

(1) To assemble, align the direction of the SP motor axis ④ with the Gear Hole of the Gear Case assy.

(2) Be sure to check, and adjust if necessary, the gap between platen and printhead (see 4-1).

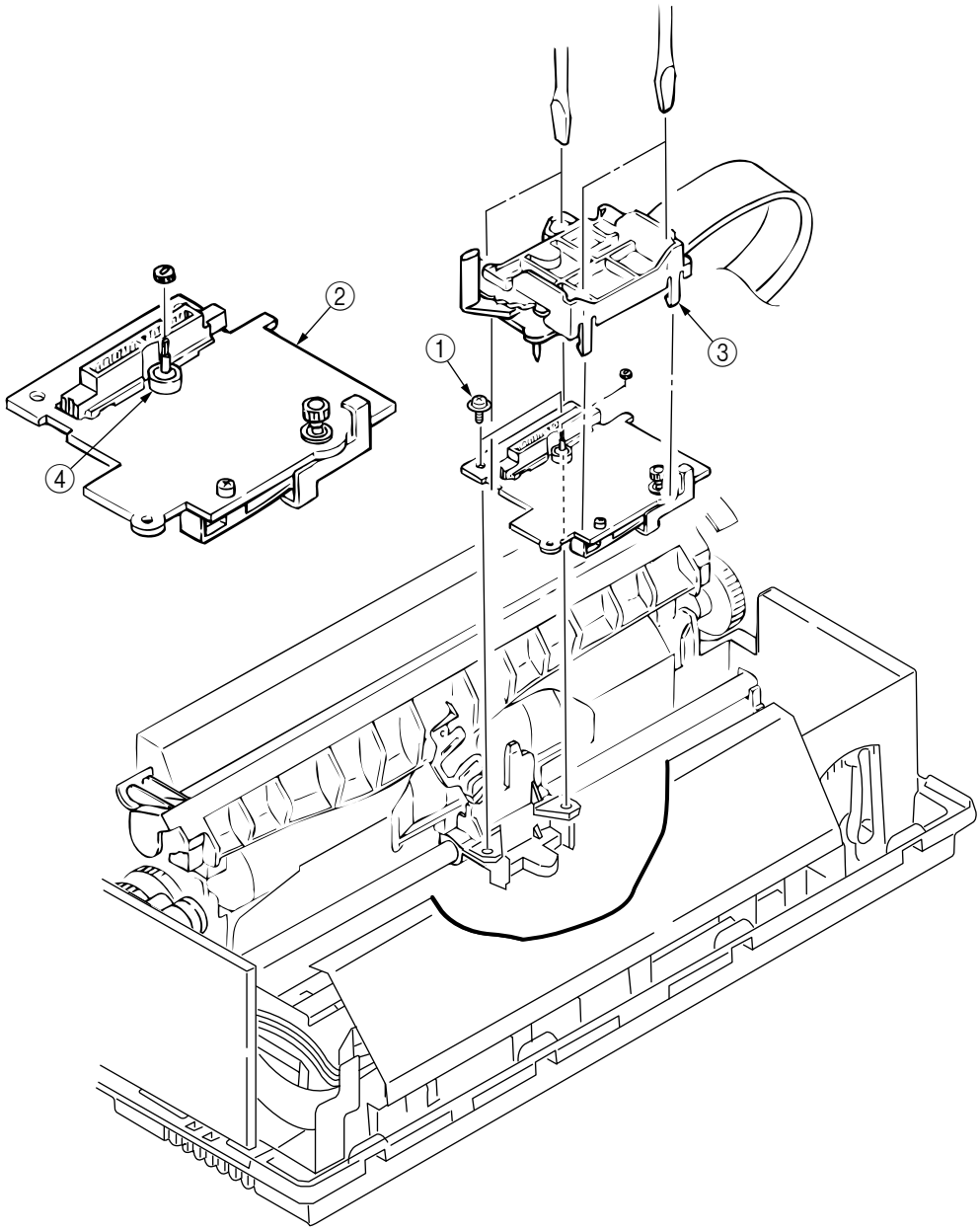

3.3.6 PC Connector

(1) Remove the printhead (see 3.3.1).

(2) Remove the upper cover (see 3.3.4 (1) – (5)).

(3) Remove the gear case Assy (see 3.3.5).

(4) Remove the PC connector ① from the space motor Assy ②.

(5) To install, follow the removal steps in the reverse order.

Note on installation:

(1) Do not touch the space motor ② or terminals of PC connector ①. Also, take care to avoid dust or foreign matters.

(2) After installation, check and adjust the gap between platen and printhead (see 4-1).

(3) Make sure that there is not any dust or oil on the connector contact section A. If it is found, wipe it off by alcohol.

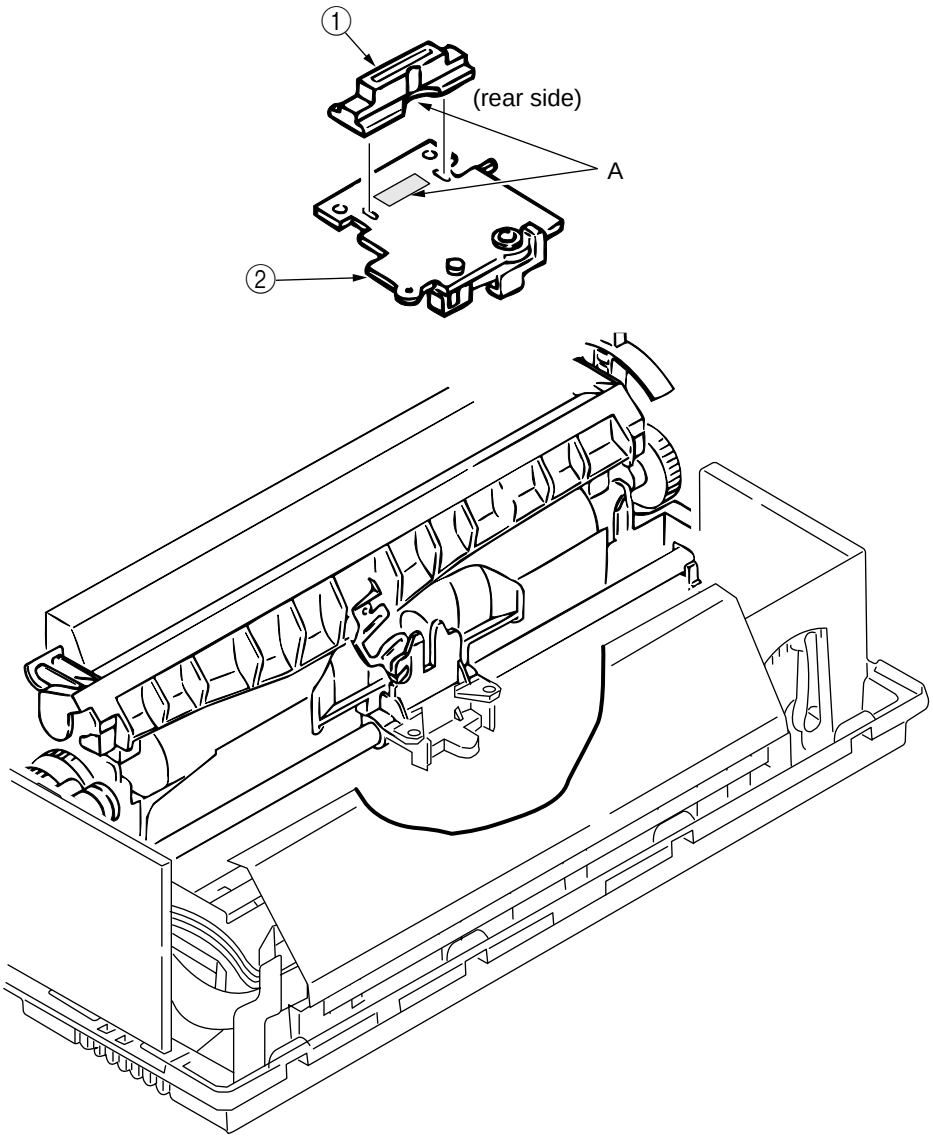

3.3.7 Space Motor, Guide Roller Assy

(1) Remove the printhead (see 3.3.1).

(2) Remove the upper cover (see 3.3.4 (1) – (5)).

(3) Remove the gear case Assy (see 3.3.5).

(4) Remove the PC connector (see 3.3.6).

(5) Remove screw ②, then the guide roller Assy ③ from the space motor ①.

(6) To install, follow the removal steps in the reverse order.

Notes on installation:

(1) Do not touch the terminals of space motor ①. Also, take care to avoid dust or foreign matters.

(2) When installing the guide roller Assy ③, push portions Ⓐ and Ⓑ against the space motor ①.

(3) When installing the space motor ①, align the face Ⓒ with carriage frame ④ and push portion Ⓓ against the frame.

(4) After installation, check and adjust the gap between platen and printhead (see 4-1).

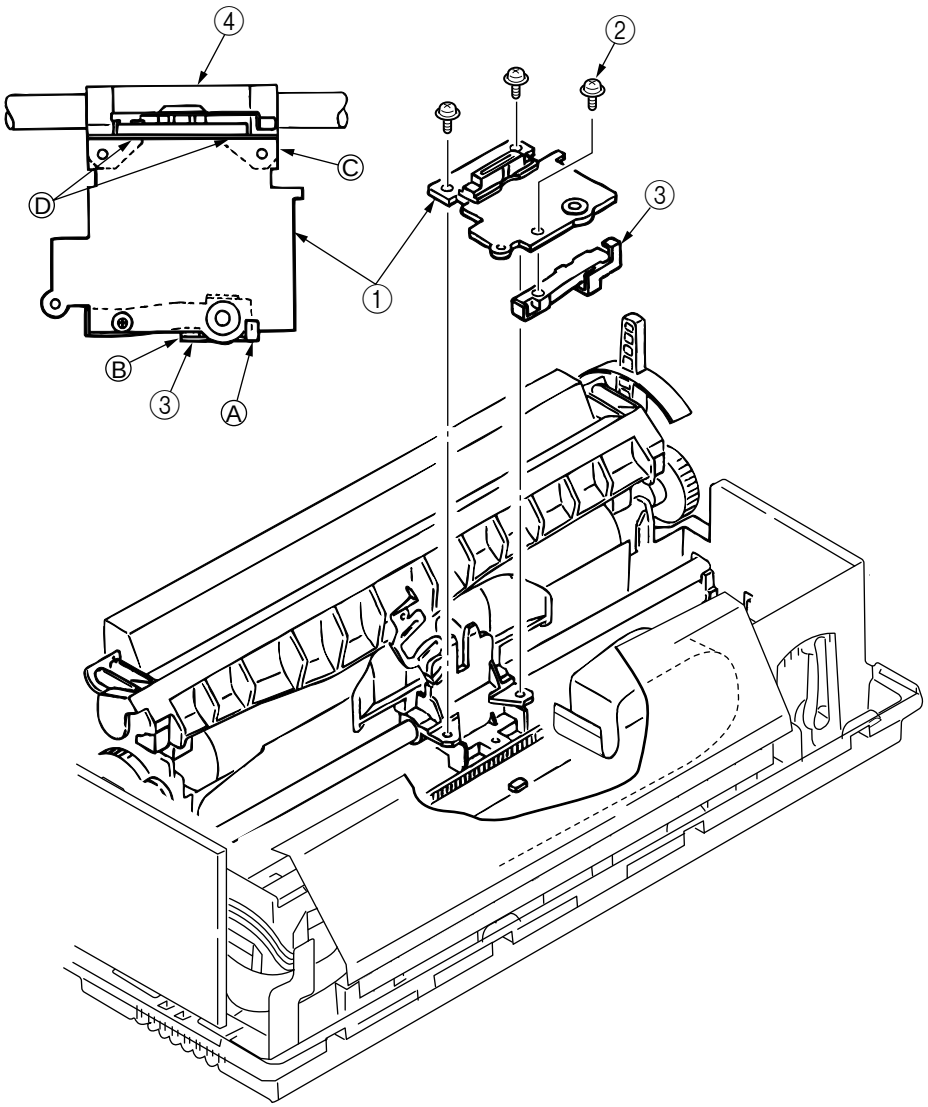

3.3.8 Space Rack

(1) Remove the printhead (see 3.3.1).

(2) Remove the upper cover (see 3.3.4 (1) – (5)).

(3) Remove the gear case Assy (see 3.3.5).

(4) Remove the space motor (see 3.3.7).

(5) Remove the spring ①.

(6) Disengage the claw on left side of space rack ② from the frame, and remove the space rack ② in upper direction.

(7) To install, follow the removal steps in the reverse order.

Note on installation:

(1) After installation, check and adjust the gap between platen and printhead (see 4-1).

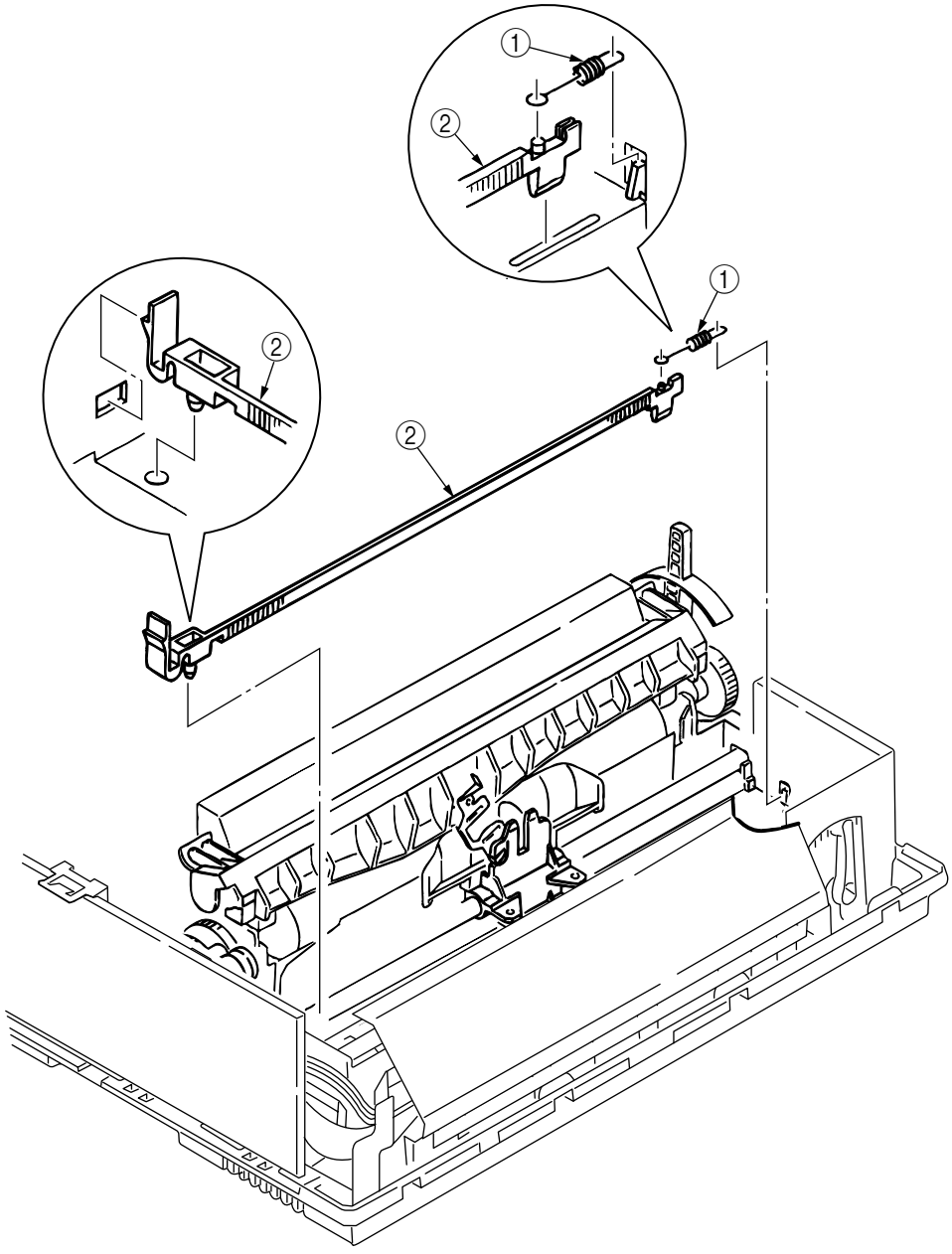

3.3.9 Carriage Cable

(1) Remove the printhead (see 3.3.1).

(2) Remove the upper cover (see 3.3.4 (1) – (5)).

(3) Remove the gear case Assy (see 3.3.5).

(4) Remove the space motor (see 3.3.7).

(5) Remove the space rack (3.3.8).

(6) Remove three screws ①, release the Main Control PCB ② by lifting clamp ⑨, and disconnect cable from connector ③, ④, ⑤, ⑥, ⑦.

(7) Remove carriage cable ⑧ and Shield_sheet_front ⑬, and Core ⑭, and Film_head_cable ⑮ from fasteners on frame.

(8) To install, follow the removal steps in the reverse order.

Note on installation:

(1) Take care not to fold the carriage cable ⑧ during installation. Curve slightly the carriage cable ⑧ when assembling into the fasteners.

(2) Shield_sheet_front ⑬ is between Frame and Core ⑭.

(3) Make sure that the paper end lever ⑫ will not contact the Paper end Sensor ⑪ when mounting the Main Control PCB.

(4) Make sure that there is not any dust or oil on the connector contact sections A to C. If it is found, wipe it off by alcohol.

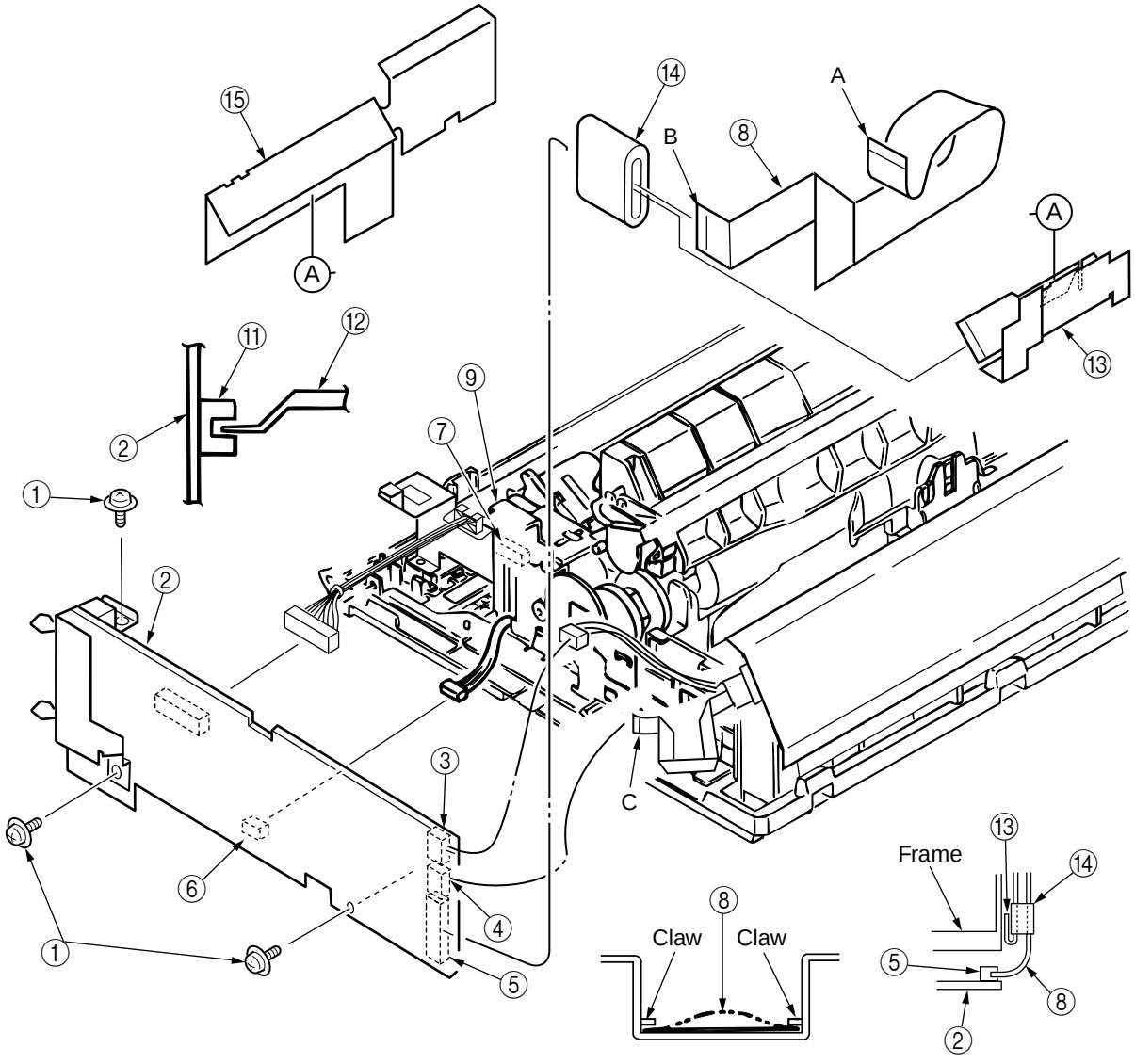

3.3.10 Backup Roller Holder Assy

(1) Remove the printhead (see 3.3.1),

(2) Remove the upper cover (see 3.3.4 (1) – (5)).

(3) Remove the gear case Assy (see 3.3.5).

(4) Remove the space motor (see 3.3.7).

(5) Remove the backup roller spring ②.

Disengage claws (2 places) of roller holder from the carriage frame ①, and remove the backup roller holder assy ③.

(6) To install, follow the removal steps in the reverse order.

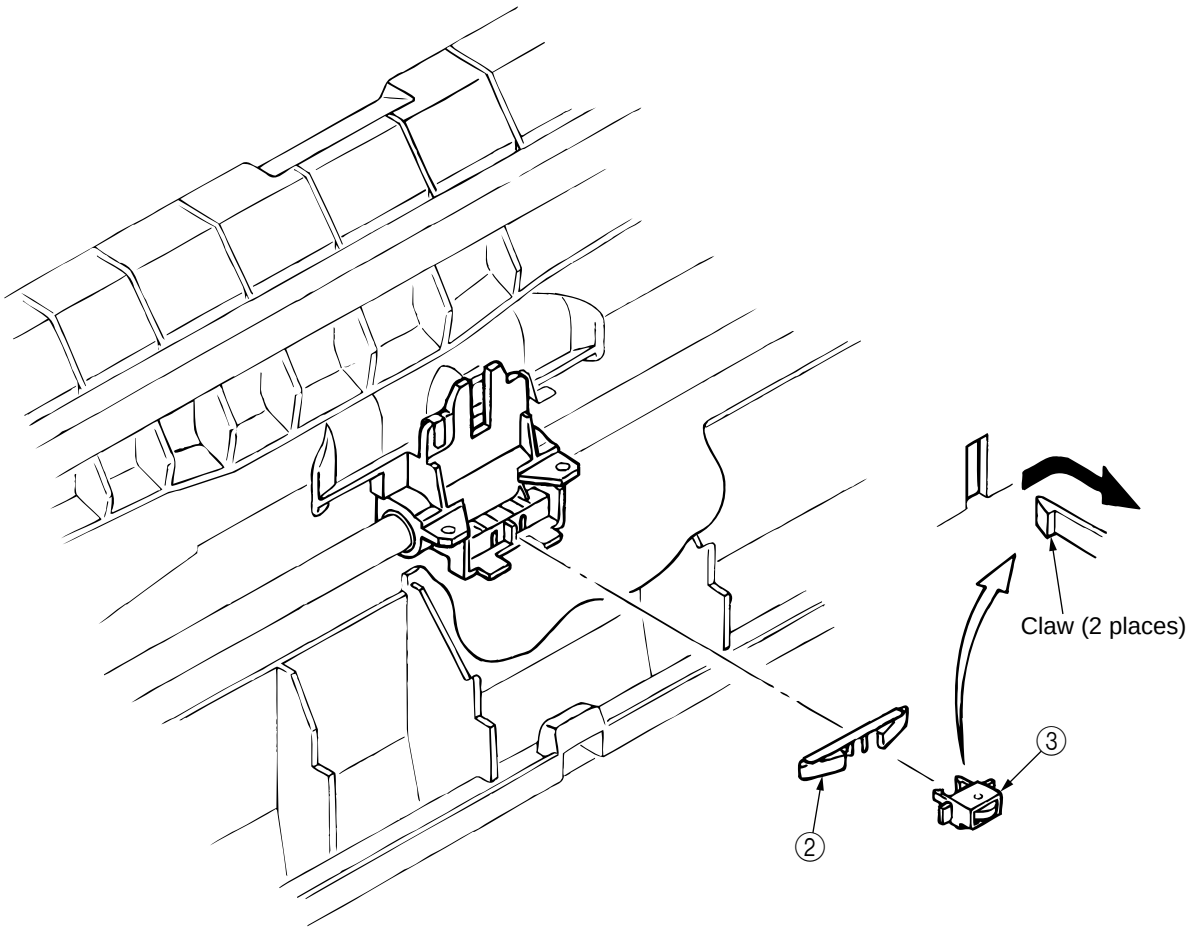

Note: Small round hole with metal tip on back up roller holder assy ③ should be facing up when installing.

3.3.11 Platen Assy

(1) Remove the printhead (see 3.3.1).

(2) Remove the ribbon protector (see 3.3.2).

(3) Remove the pull-up roller Assy (see 3.3.3).

(4) Remove the upper cover (see 3.3.1 (1) – (5)).

(5) Turn the change lever ① to the bottom position.

(6) Push in the lock levers ② on both sides to unlock from the frame, then rotate them upward by 90°.

(7) Remove the platen Assy ④ from base frame.

(8) To install, follow the removal steps in the reverse order.

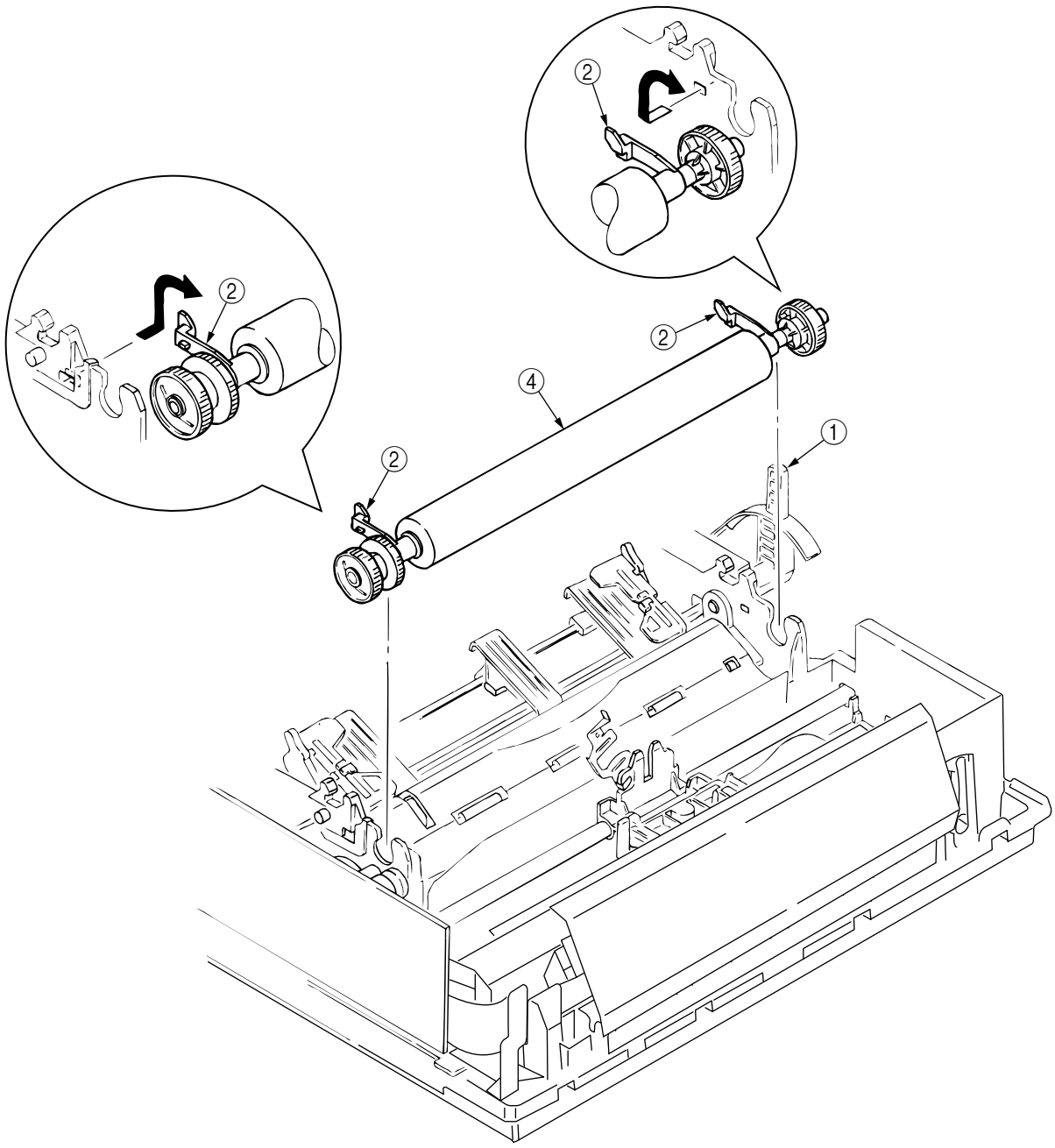

3.3.12 Main Control PCB

(1) Remove the upper cover (see 3.3.4 (1) – (5)).

(2) Remove three screws ①, and release the Main Control PCB ② by lifting clamp ④.

(3) Disconnect all cables from Main Control PCB ②.

(4) To install, follow the removal steps in the reverse order.

Note on installation:

(1) Insert one sensor lever ③ between sensor when installing the Main Control PCB ②.

(2) Make sure that there is not any dust or oil on the connector contact sections A to B. If it is found, wipe it off by alcohol.

Attention in exchange:

When changed the Main control PCB ② execute chapter 4 4-7.

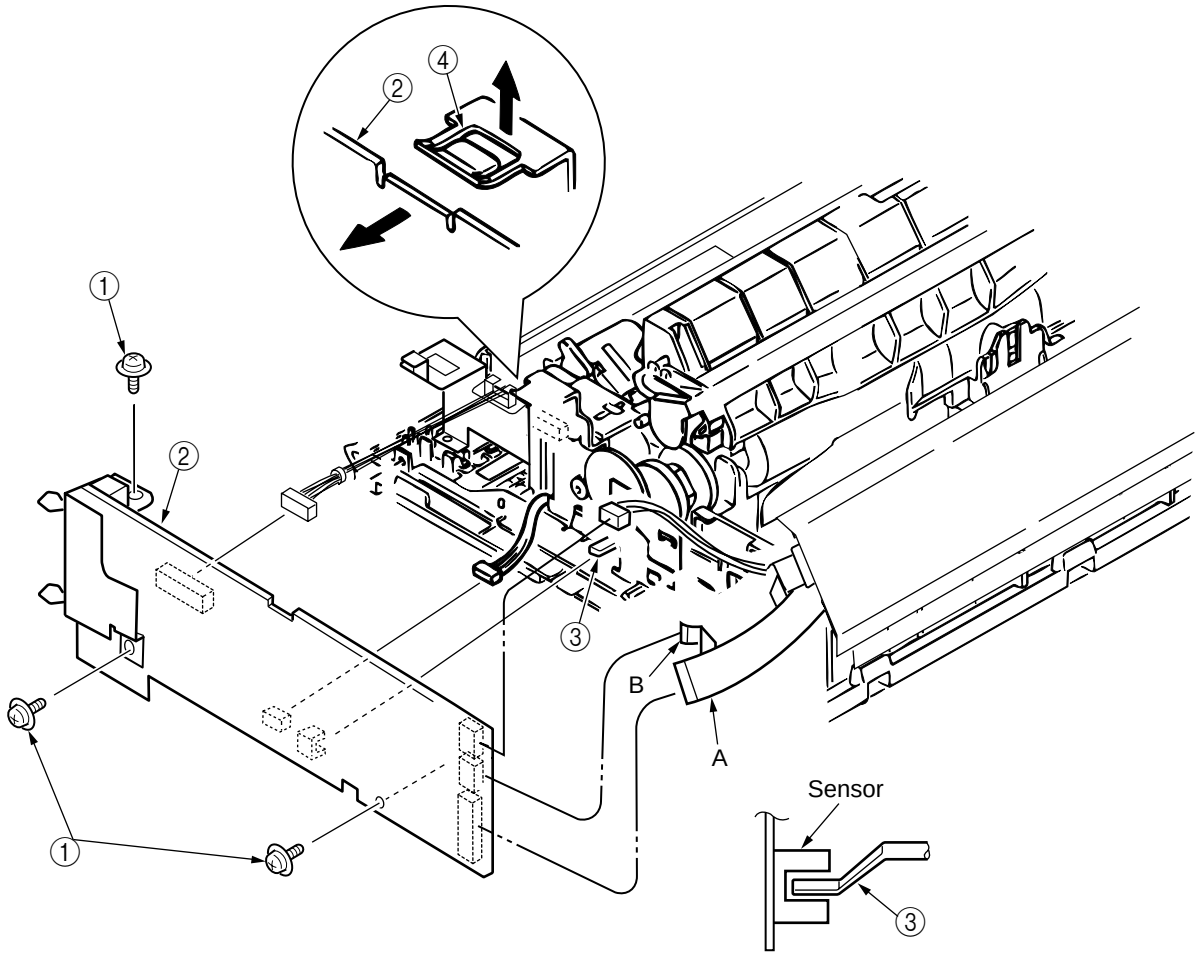

3.3.13 LF Motor

(1) Remove the printhead (see 3.3.1).

(2) Remove the ribbon protector (see 3.3.2).

(3) Remove the pull-up roller Assy (see 3.3.3).

(4) Remove the upper cover (see 3.3.4 (1) – (5)).

(5) Remove the platen Assy (see 3.3.11).

(6) Remove the Main Control PCB (see 3.3.12).

(7) Remove the left FG plate ①.

(8) Release the lock A to remove the LF motor ②.

(9) To install, follow the removal steps in the reverse order.

Remark on assembly:

(1) Press the LF Motor Cable with a portion Ⓐ of the Motor Plate.

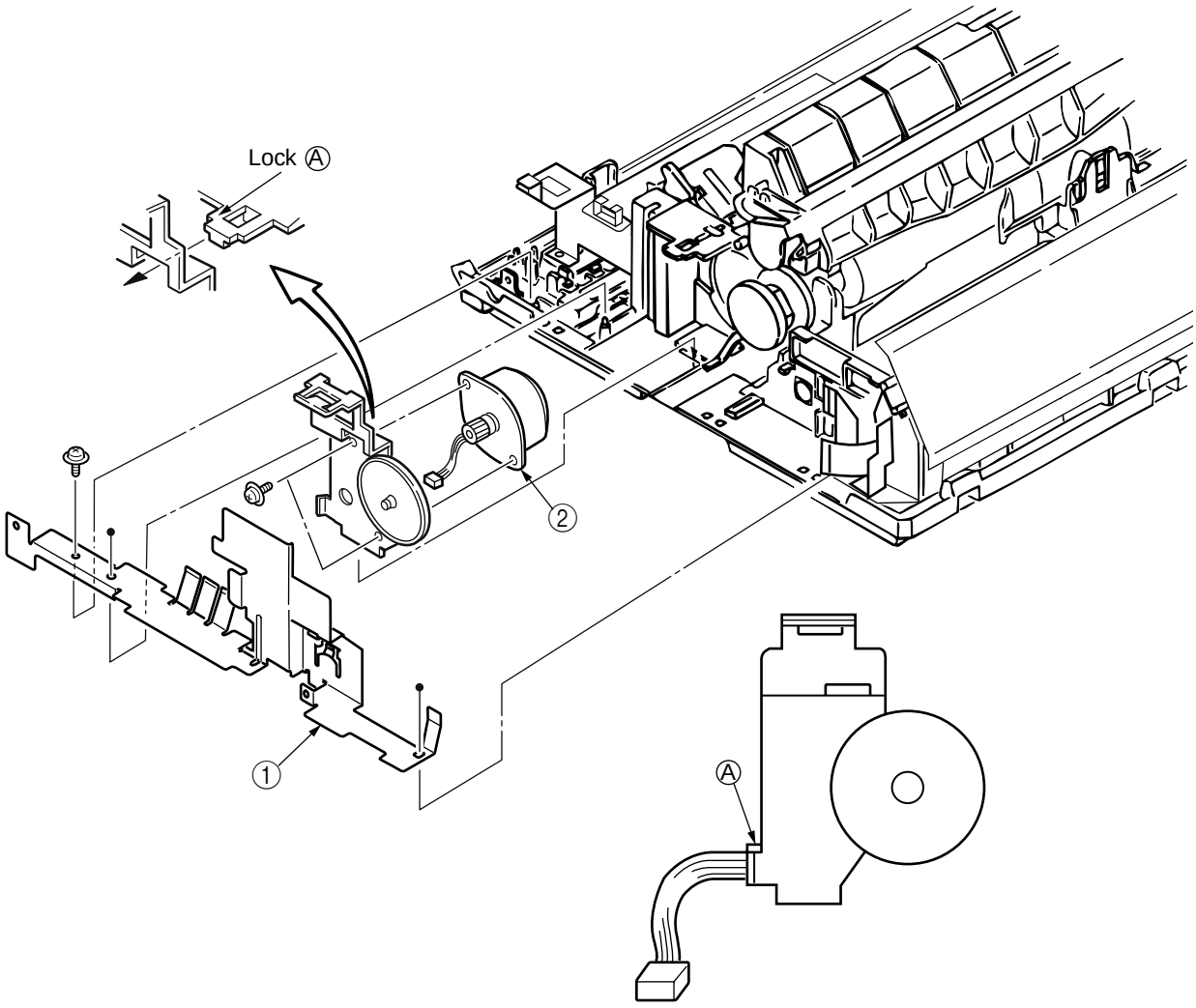

3.3.14 Operation Panel PCB

(1) Remove the upper cover (see 3.3.4 (1) – (5)).

(2) Disconnect the cable ① from connector ③ of Main Control PCB ②.

(3) Disengage claws on both sides from the frame, and remove the operation panel ④.

(4) Open claws (4 places) and remove the operation panel PCB ⑤ from the operation panel ④.

(5) To install, follow the removal steps in the reverse order.

Note on installation:

(1) Make sure that there is not any dust or oil on the connector contact section A. If it is found, wipe it off by alcohol.

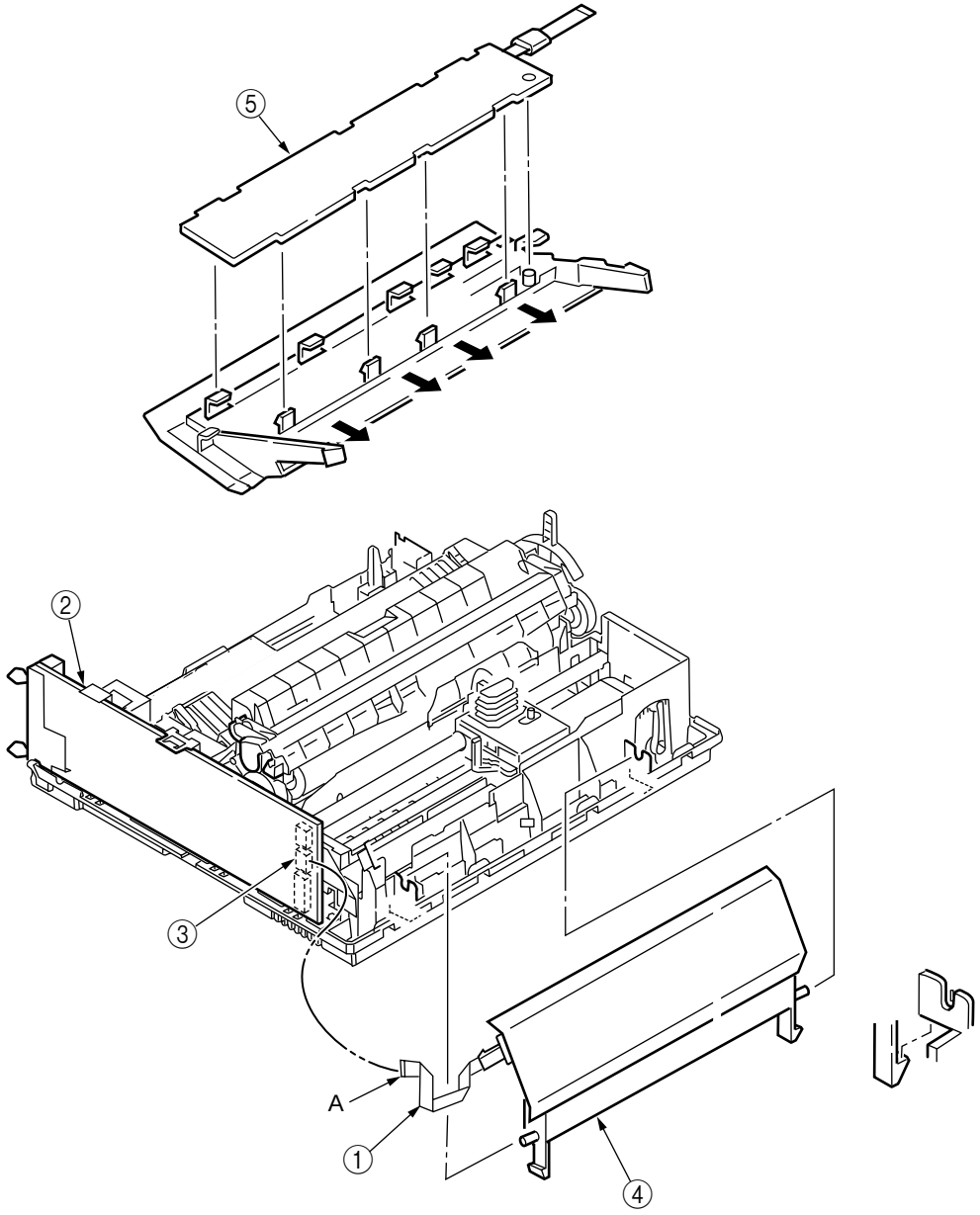

3.3.15 Power Supply Unit, Sensor PCB

⚠Warning	Risk of Electric Shock	

There is a risk of electric shock during replacement of the power supply.

Use insulating gloves or avoid direct contact with any conducting part of the power supply, and caution should be exercised during replacement.

The capacitor may take one minute to complete discharge after the AC cable is unplugged. Also, there is a possibility that the capacitor doesn't discharge because of a breakage of the PCB, etc., so remember the possibility of electric shock to avoid electric shock.

(1) Remove the upper cover (see 3.3.4 (1) – (5)).

(2) Disconnect the cable ③ from the connector ② the Main Control PCB ①.

(3) Remove two screws ④, and remove the Power Supply Assy.

(4) Remove the cable ③ from the connector ⑥ on the Power Supply Unit ⑤.

(5) Remove the cable ⑦ from the connector ⑧ on the Power Supply Unit ⑤.

(6) Remove the cable ③ from the connector ⑩ on the Sensor PCB ⑨.

(7) Remove four screws ⑪, and remove the Power Supply Unit ⑤.

(8) Remove the screw ⑫, and remove the Sensor PCB ⑨.

(9) To install, follow the removal steps in the reverse order.

Remark on assembly:

(1) To mount the Power Supply Unit ⑤ and Sensor PCB ⑨, set the change lever to the top position so that the Switch Lever ⑬ will not hooked on the microswitches ⑭.

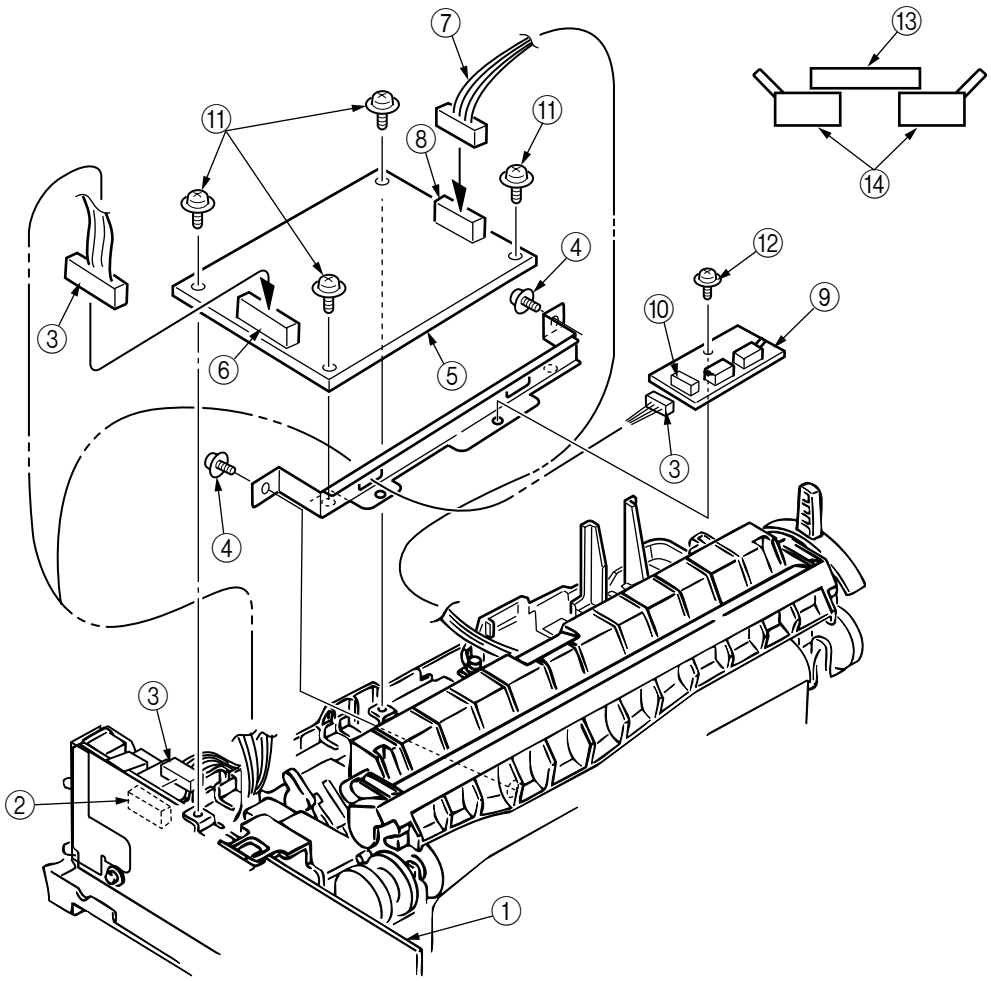

3.3.16 AC inlet and AC Switch

(1) Remove the upper cover (see 3.3.4 (1) – (5)).

(2) Remove AC inlet ① and AC switch ② from the frame guide.

(3) Disconnect the cable ③ from the connector ④ on the Power Supply Unit ⑤.

(4) Remove the screw ⑥.

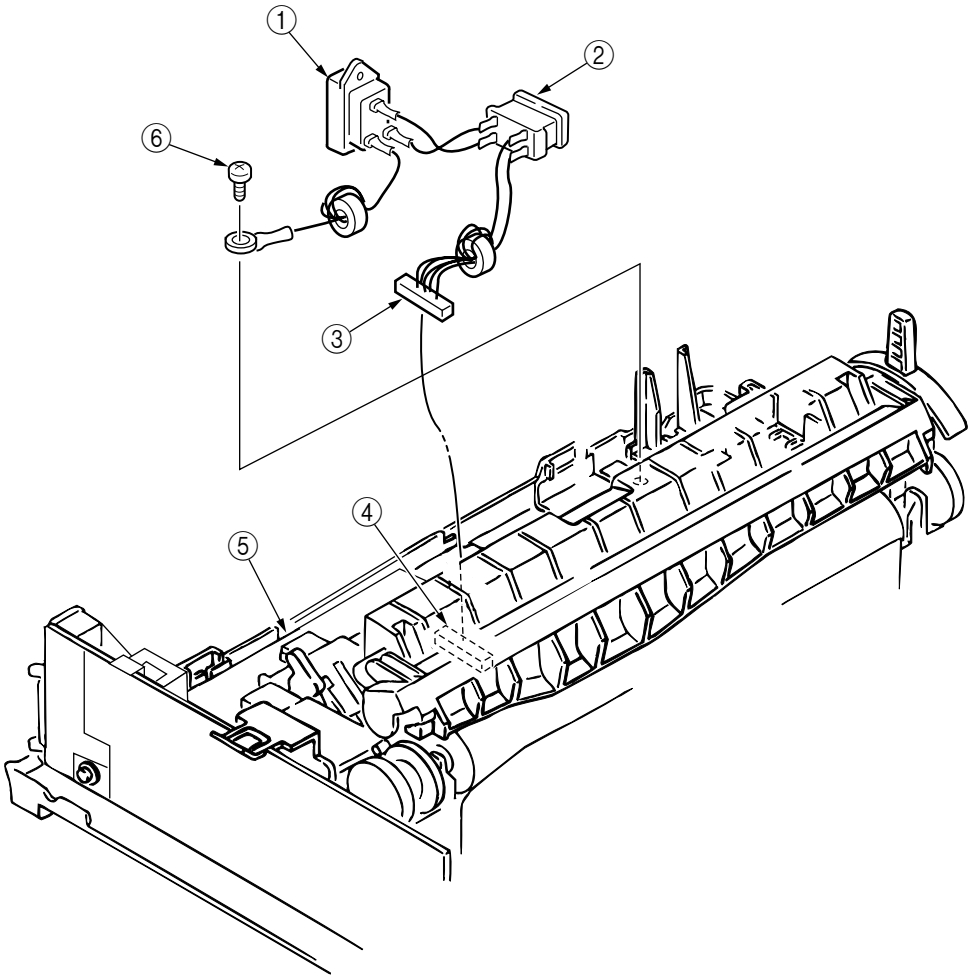

3.3.17 Change Lever and Gears

(1) Remove the upper cover (see 3.3.4 (1) – (5)).

(2) Remove the reset spring ①, then remove the idle gear ②, the tractor gear ④ and the change gear ⑤.

(3) Push back the protrusion of the Change Gear Shaft ⑥ with a flatblade screw driver to remove the change lever ③.

(4) To perform mounting, follow the reverse procedure of removal.

Remark on assembly:

(1) To insert the change lever into the Change Gear Shaft ⑥, match the flat surface (D cut).

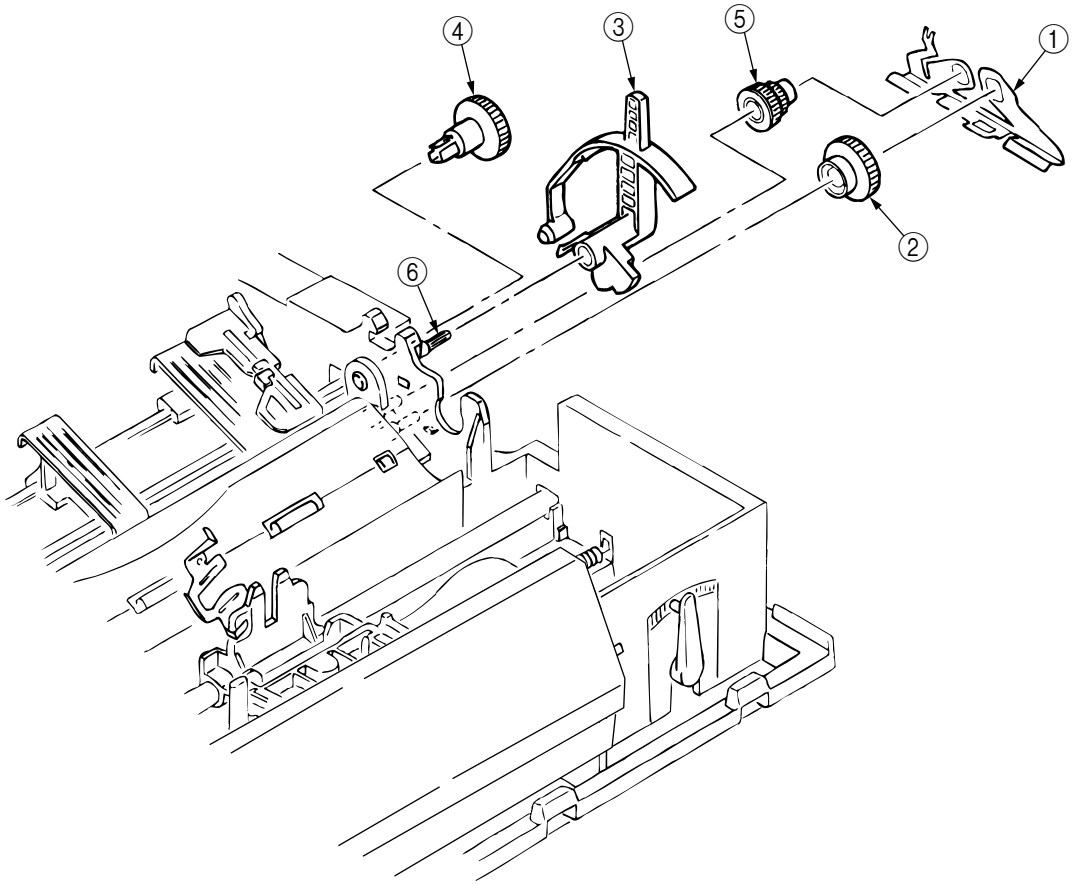

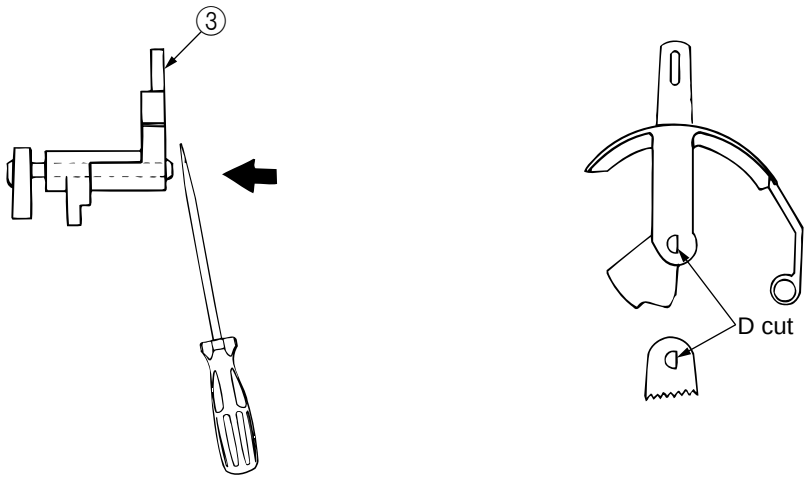

3.3.18 Carriage Shaft

(1) Remove the printhead (see 3.3.1).

(2) Remove the upper cover (see 3.3.4 (1) – (5)).

(3) Remove the Main Control PCB (see 3.3.12).

Remove the FG plate (L) ②.

(4) Slide the carriage shaft ① to the left side (in the direction of the arrow) to remove.

(5) To perform mounting, follow the reverse procedure of removal.

Note on installation:

(1) After installation, check and adjust the gap between platen and printhead (see 4-1).

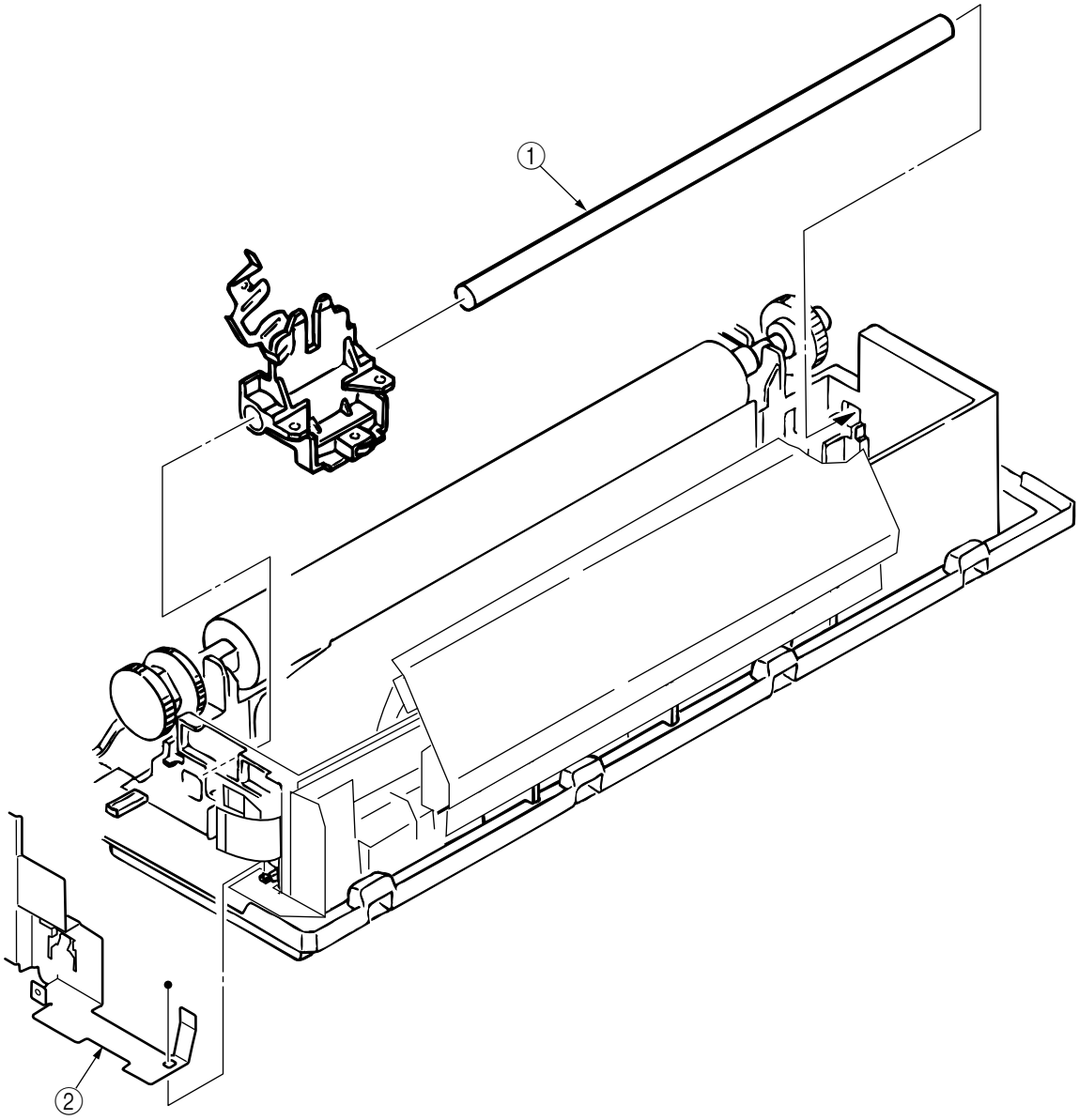

3.3.19 Paper Pan

(1) Remove the printhead (see 3.3.1).

(2) Remove the ribbon protector (see 3.3.2).

(3) Remove the pull-up roller assy (see 3.3.3).

(4) Remove the upper cover assy (see 3.3.4 (1) – (5)).

(5) Remove the platen assy (see 3.3.11).

(6) Release claws Ⓐ.

(7) Lift up the paper chute assy ① and remove.

(8) To perform mounting, follow the reverse procedure of removal.

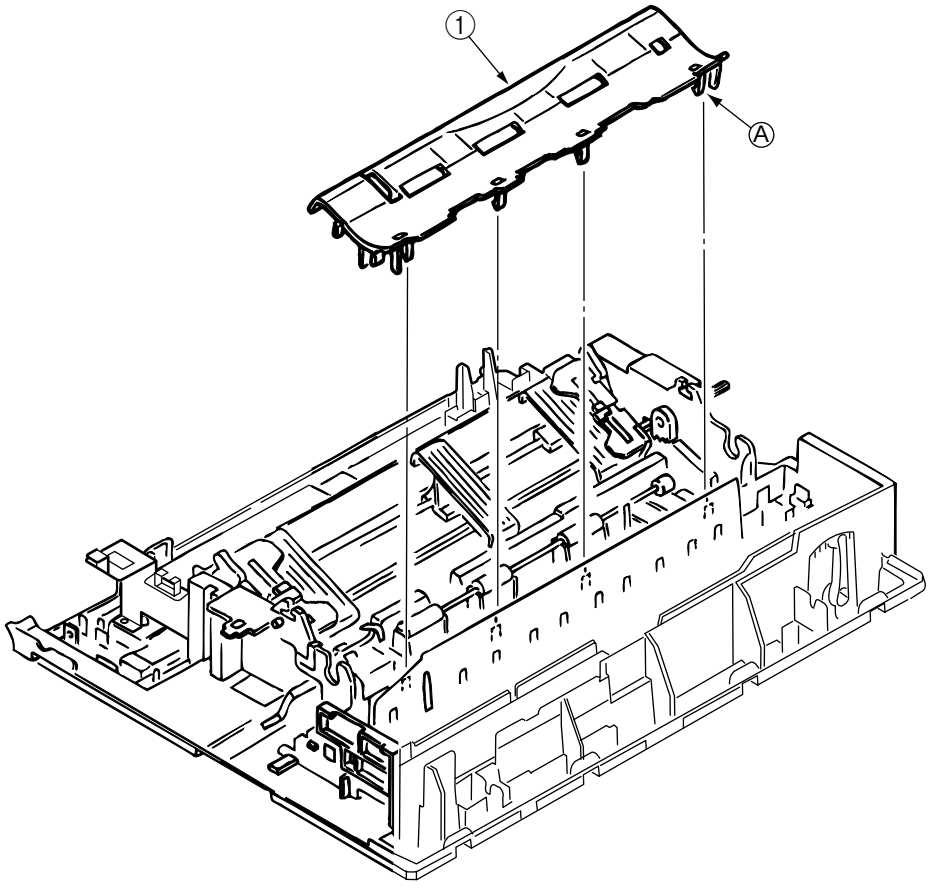

3.3.20 Rear Tractor Assy

(1) Remove the printhead (see 3.3.1).

(2) Remove the ribbon protector (see 3.3.2).

(3) Remove the pull-up roller assy (see 3.3.3)

(4) Remove the upper cover (see 3.3.4 (1) – (5)).

(5) Remove the reset spring (see 3.3.17 (3))

(6) Remove the tractor gear ①.

(7) Shift the drive shaft ② to the right side to remove (in the direction of the arrow).

(8) To perform mounting, follow the reverse procedure of removal.

Remark on assembly:

(1) When the Tractor Assy (L) ③ (R) ④ have been detached from the Drive Shaft, align the protrusions 5 of the Pin Tractor Wheels to the same direction before assembly.

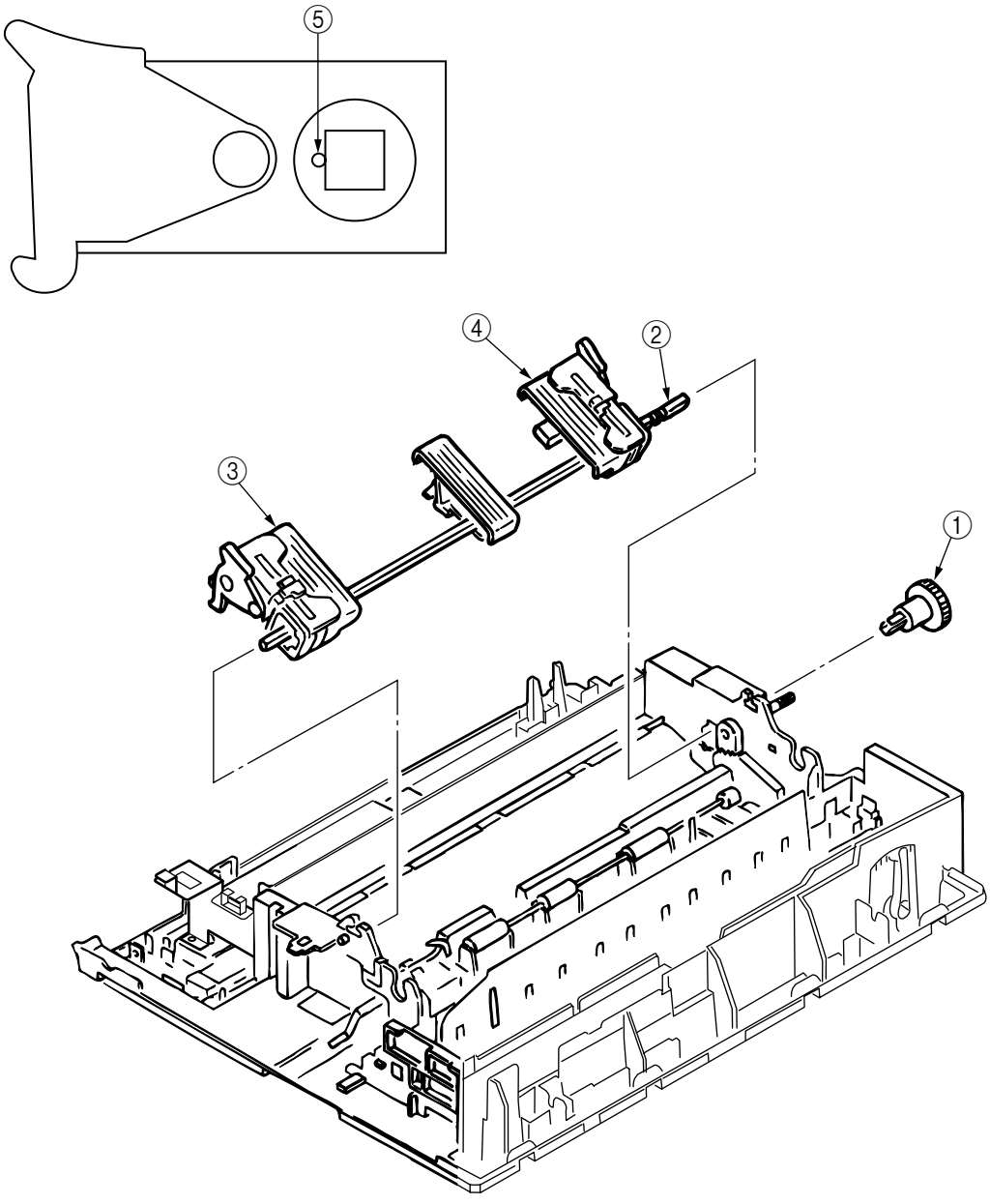

3.3.21 Rear Pressure Assy

(1) Remove the upper cover (see 3.3.4 (1) – (5)).

(2) Remove the change lever and gears (see 3.3.17).

(3) Remove the paper pan (see 3.3.19).

(4) Remove the rear pressure roller ①.

(5) Rotate the release shaft ② and move it to the left to detach the release shaft ②.

Match the Main Frame Rib Ⓐ with the protrusion Ⓑ of the Release Shaft.

(6) Remove rear pressure SP assy ③.

(7) To install, follow the removal step in the reverse order.

Note: (1) At mounting release shaft ②, pay attention to the gear engagement of release shaft ②, change arm lever ⑥, change gear shaft ⑦.

(2) There are 5 Rear pressure Spring Assemblies. Use two pieces which have larger spring diameter on the right side. Use three remaining pieces on the left side (for PD427).

(3) Make sure that the Release Shaft ② will be on top of the Support spring ④.

(4) To assemble the Release Shaft ②, make sure that the protrusion of the switch lever ⑤ is in the U groove of the Release Shaft ②.

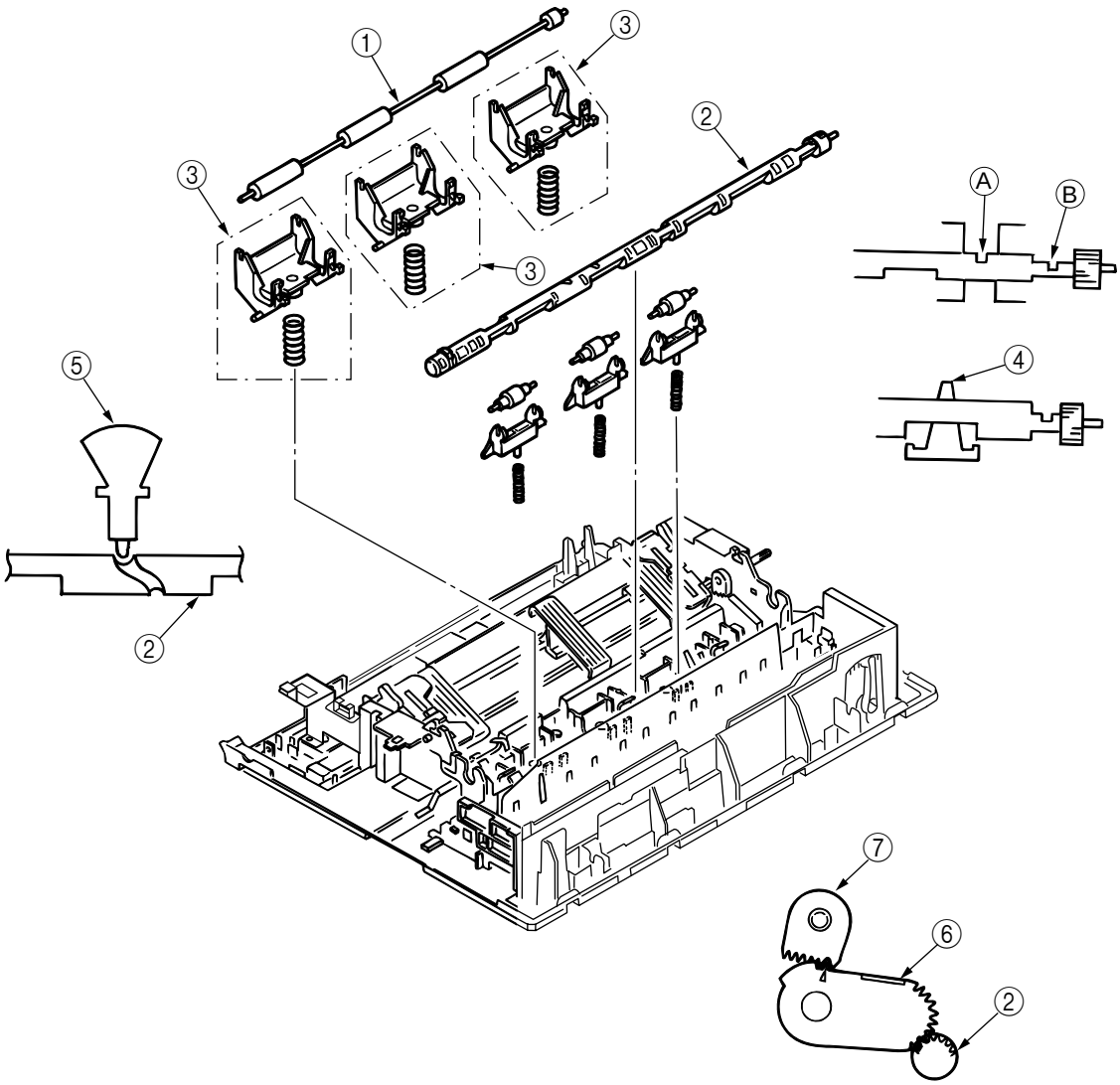

3.3.22 Switch Lever

(1) Remove the upper cover (see 3.3.4 (1) – (5)).

(2) Remove the Power Supply Assy (see 3.3.15).

(3) Remove the change lever and gears (see 3.3.17).

(4) Remove the paper pan (see 3.3.19).

(5) Remove the rear pressure assy (see 3.3.21).

(6) Pull the Switch Lever toward you and remove it upward.

(7) To install, follow the removal step in the reverse order.

Remark on assembly:

(1) At the time of the Switch Lever assembly, make sure that the Micro switch on the Sensor PCB works properly.

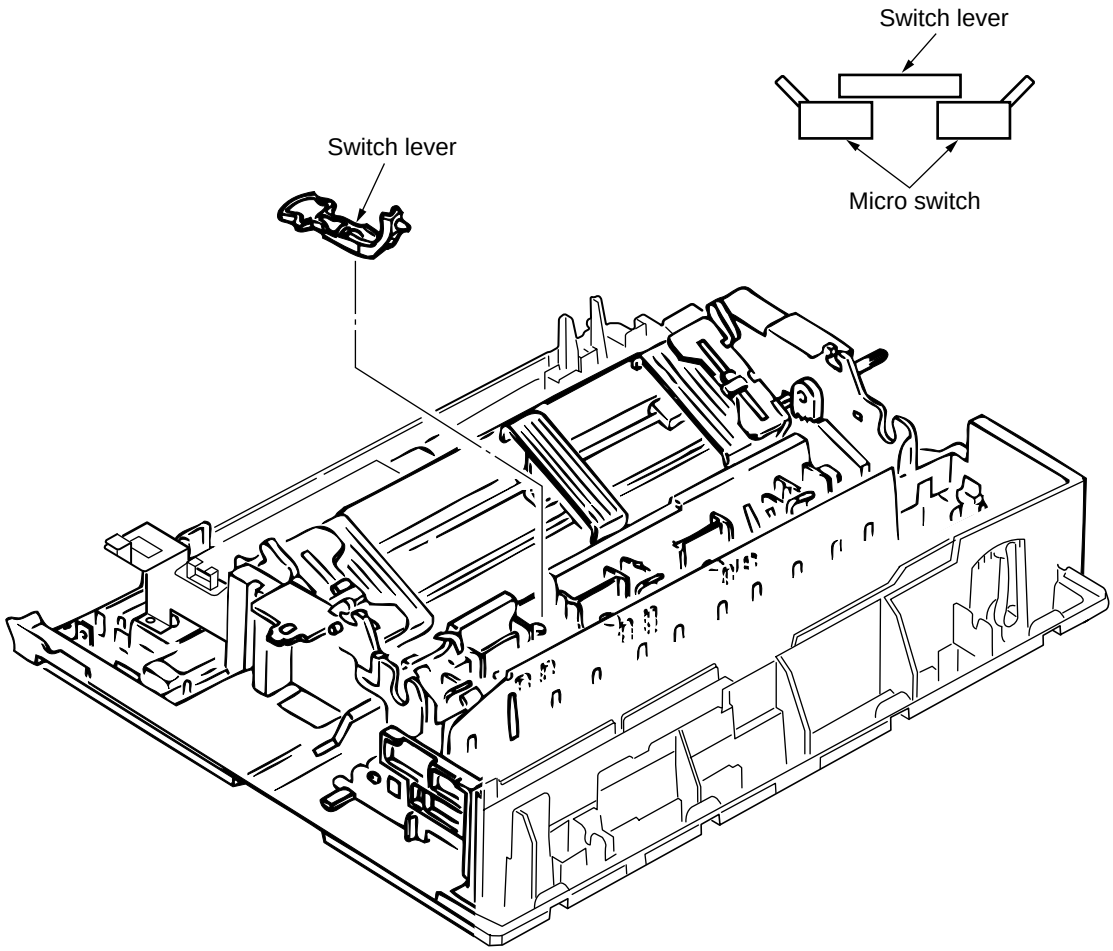

4. ADJUSTMENT

(1) Be sure to carry out this adjustment with the printer mechanism mounted on the lower cover.

(2) Be sure to carry out this adjustment operation on a level and highly rigid work table (flatness: less than 0.039 inch or 1 mm) so as to minimize adjustment error.

No.	Item	Specification	Drawing	Adjustment method
4–1–1	Gap between the platen and the print head 1) Parallelism adjustment	Variation of value at the left, the center and the right shall be less than 0.02 mm	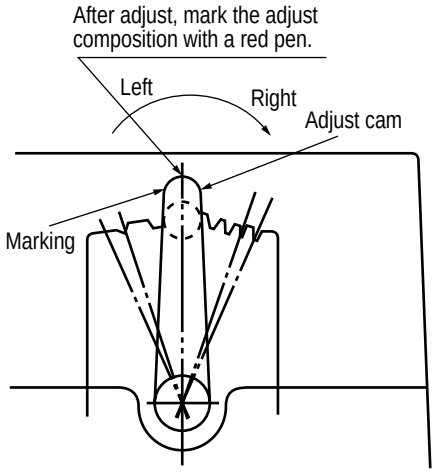	It shall be measured at 3 points: the left end, the center and the right end of the platen. Adjustment method (1) Gap between the platen and the print head at the left end and the right end shall be adjusted by rotating the adjust cam. (2) Set the adjust lever at the Range: 1. Press the adjust gear downward (in direction A) to push the adjust gear and the adjust gear out of mesh. (3) Adjust the gap by rotating the adjust screw in direction B or C while the adjust lever and the adjust gear are disengaged. (4) After adjustment, mark the adjust cam position with a red pen.
	2) Initial adjustment	0.35±0.03 mm	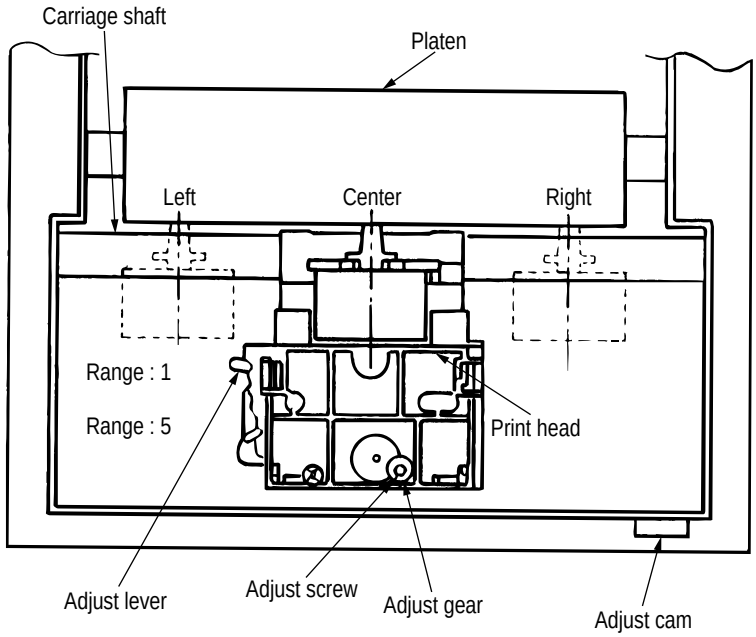	

No.	Item	Specification	Drawing	Adjustment method
			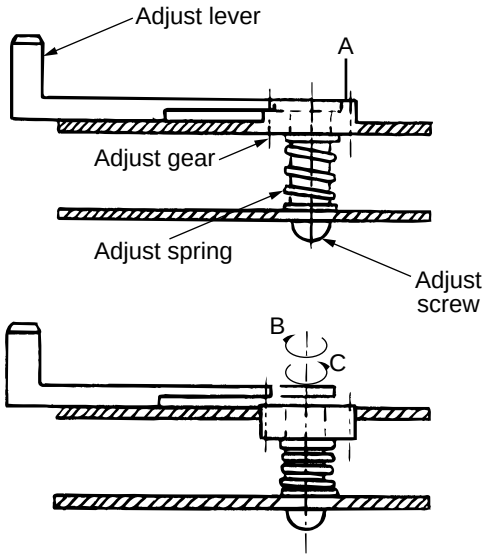	Note 1) The head gap shall be measured with the change lever set to rear position. Note 2) The head gap shall be measured positioning the platen gear (R) craw on the top. Note 3) Move the adjust screw in clockwise direction (in direction B) to measure.
			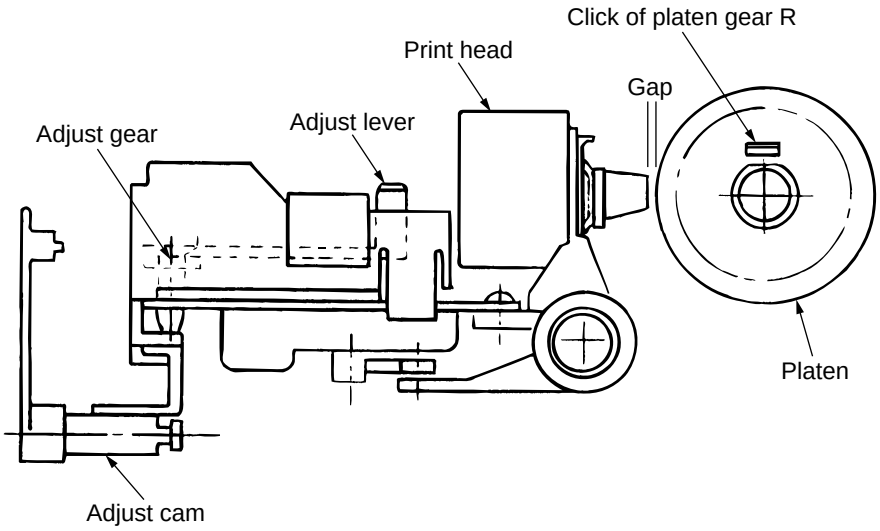	
4–1–2	Measure variation of gap when range is changed.	Gap=0.65±0.05 at the range 5.		

No.	Item	Specification	Drawing	Adjustment method
	Gap between the contact and the monitor	0.3mm or more	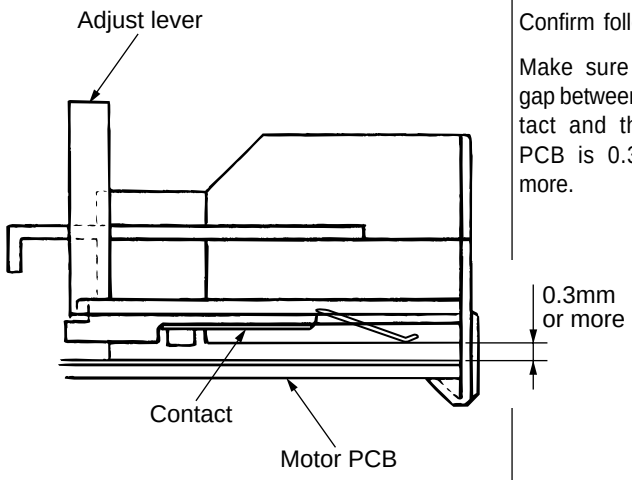 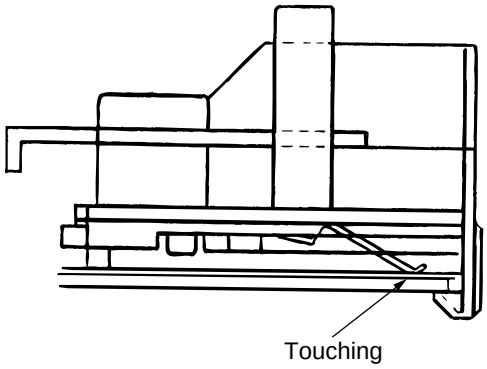	Confirm followings. Make sure that the gap between the contact and the motor PCB is 0.3 mm or more. At the time of printing test, make sure that the contact touches the motor PCB and it becomes reduced speed mode when the adjust lever is set to range 2 and 4.

No.	Item	Specification	Drawing	Adjustment method
4–2	Gap between the platen and the paper pan	1±0.5	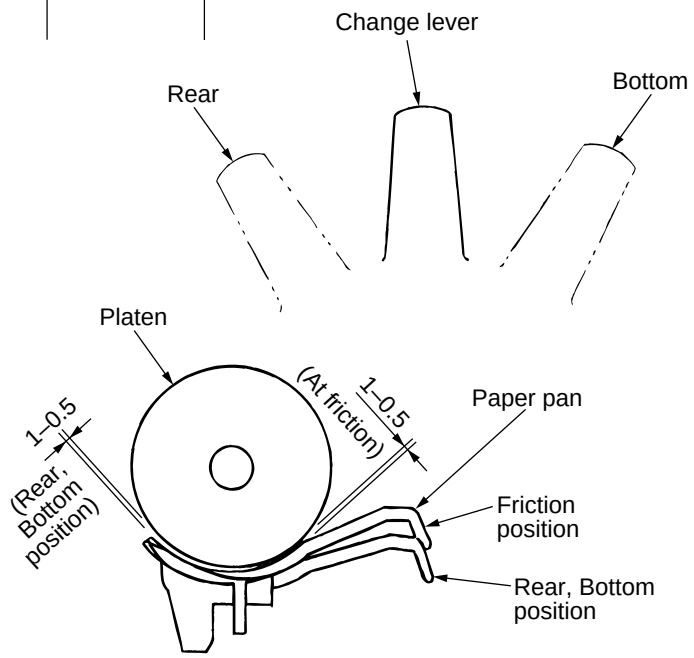	Confirm followings. (1) When the change lever is set at Friction position, the gap between the platen and the paper pan at the rear side shall be 1±0.5mm. (2) When the change lever is set at Rear or Bottom position, the gap between the platen and the paper pan at the front side shall be 1±0.5 mm.
4–3	Gap between the platen and the pressure roller		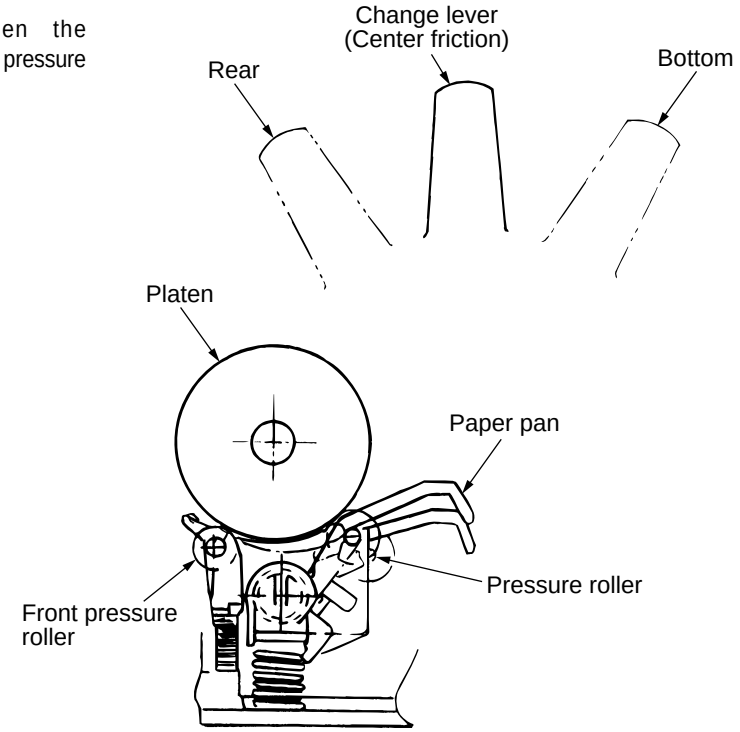	Confirm followings. (1) When the change lever is set at Friction position, all the pressure rollers shall be pressed to the platen. (2) When the change lever is set at Rear or Bottom position, the gap between the platen and the pressure roller at the rear side shall be 3mm. The front pressure rollers shall be pressed to the platen.

No.	Item	Specification	Drawing	Adjustment method
4–4–1	Rotation of the push tractor		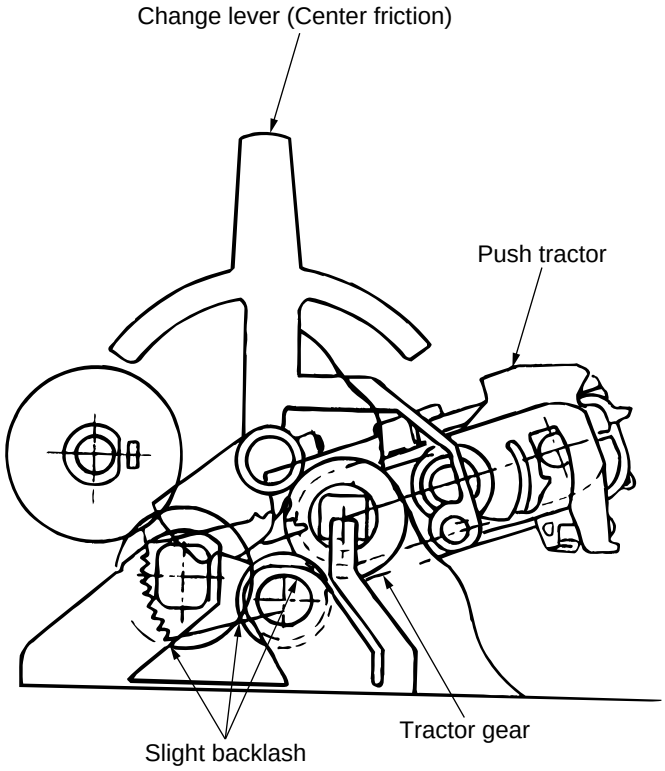	To confirm: The tractor gear shall rotate smoothly when the change lever is set at Friction position.
4–4–2	Backlash between gears	Approx. 0.05 to 0.11 mm		To confirm: There shall be slight backlash between gears to allow smooth rotation of gears. (Backlash 0.05 to 0.11 mm)

No.	Item	Specification	Drawing	Adjustment method
4–5–1	Ribbon feed		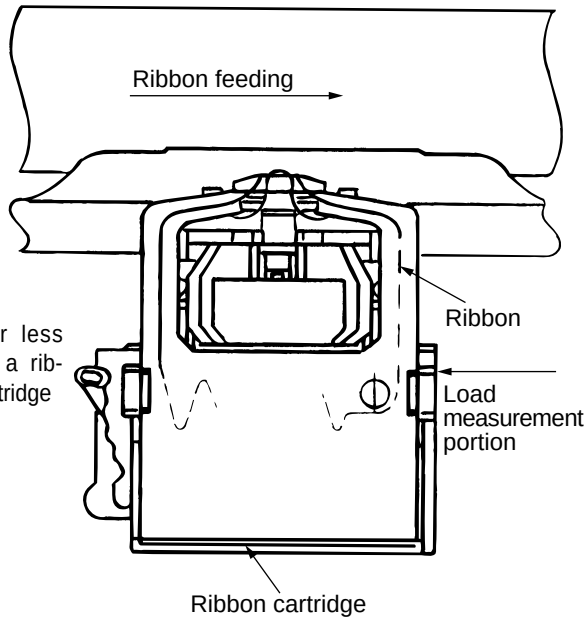	To confirm: Ribbon shall be fed smoothly when the carriage is moved from side to side.
4–5–2	Running load to spacing mechanism	250g or less without a ribbon cartridge		To confirm: Make sure that the power is turned off at the time of measurement.

No.	Item	Specification	Drawing	Adjustment method
4–6	Engagement of the double gear and the LF motor idle gear of the Platen Assy.		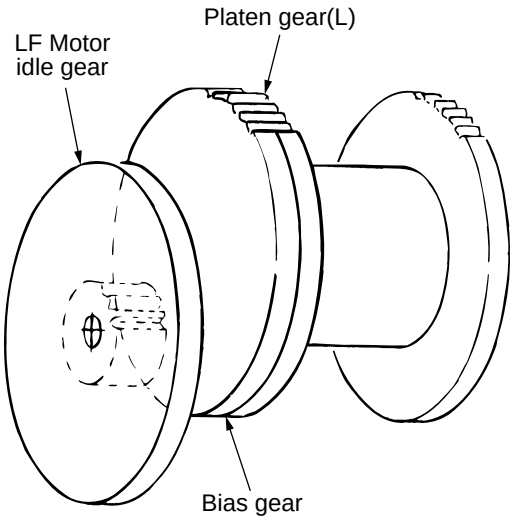 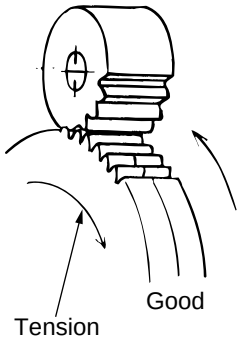 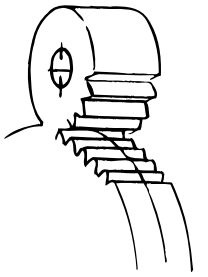	To confirm: The idle gear of the LF motor and the platen gear (L) and the bias gear of the platen shall be in mesh in such way that the platen gear (L) and the bias gear rotate against each other to pinch the teeth of idle gear. The idle gear stays in mesh with the platen gear (L) and the bias gear and not locked. The bias gear and the platen gear shall be staggered by one teeth as shown in the drawing.

No.	Item	Method
4–7	Resetting Menu to the Factory Default.	The factory default setting for the Printer. To reset the printer to the factory default: (1) Turn the printer off. (2) Press and hold down the SEL key and QUIET key while turning on the printer. The PRINT QUALITY light will turn on the light.
	Write serial number to the printer.	Use a "Serial number registration utility", and write in a serial number of the printer. (Usage of a utility is reference with a Operation manual of a utility)
	Check the serial number.	Confirm the serial number that wrote in by a "Serial number registration utility". A confirmation method is as follows. (1) Turn the printer off. (2) Press and hold down the SEL key and TEAR key while turning on the printer. (3) Check a serial number of a printer from a print result of a menu printed according to the thing of the following format. <A print format example> ML420 MEI A F/W 01.00 44710001YR-01 LD 01.00 S/N: AK02022533D0 ← Confirm this serial number. : : : (4) Confirm that a serial number affixed to the printer is the same as a print result of (3). Write in a serial number again when a serial number is not printed or and when a serial number is not the same, use a "Serial number registration utility".

5. CLEANING AND LUBRICATION

5.1 Cleaning

[Cautions]

1. Be sure to turn OFF the AC POWER switch before cleaning. Remove the AC power cord from the printer.
2. Avoid dust inside the printer mechanism when cleaning.
3. If a lubricated part has been cleaned, be sure to apply lubricating oil to that portion after cleaning.

   (1) Cleaning time

   When the equipment operating time has reached six months or 300 hours, whichever comes first.

   (2) Cleaning tools

   Dry cloth (soft cloth such as gauze), vacuum cleaner

   (3) Places to be cleaned

   Table 5.1 lists the places to be cleaned:

Table 5.1

Place to be cleaned	Cleaning procedure
Carriage shaft and the vicinity Paper travel surface	Remove paper waste and wipe off stain, dust, ribbon waste. etc.

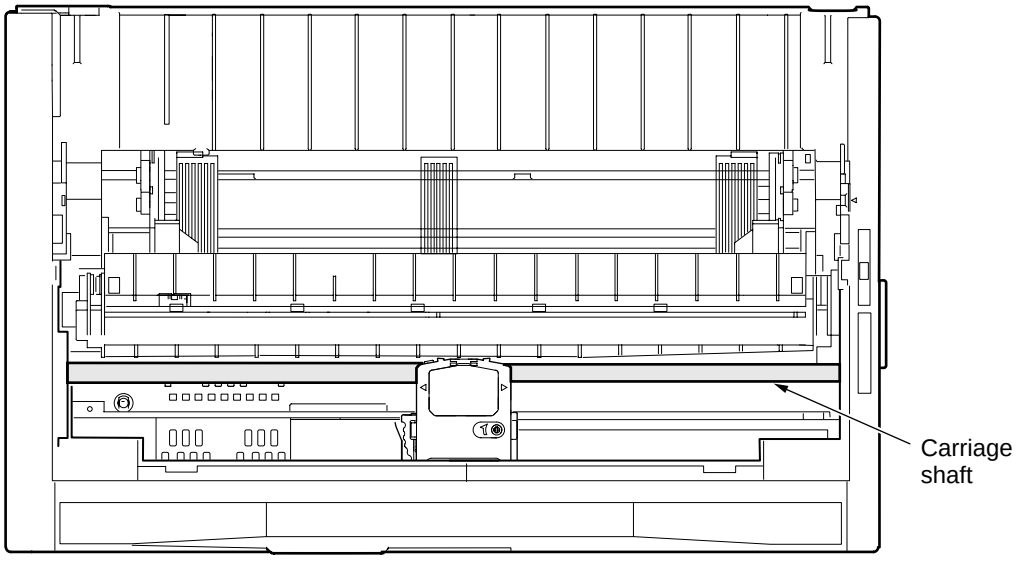

5.2 Lubrication

This printer is designed to be maintenance free and requires no lubrication during normal operation. However it is necessary to apply lubricant in case the printer is disassembled, reassembled, cleaned or parts have been changed.

(1) Cleaning time

Remarks:

1) Turn off the power before cleaning.

2) Make sure that paper dust will not fall inside of the machine.

- Cleaning period:

  6 months of operation or 300 hours of operation, whichever the earlier.

- Cleaning points:

  Carriage shaft and surroundings: → Remove paper and ribbon dust.

  Paper path: → Clean stains and dusts.

  Paper End Sensor → Remove the dust on the Sensor.

(2) Lubricant

- Pan motor oil (or equivalent): PM
- Molicort (or equivalent): EM-30L

(3) Amount of lubricant

- Medium amount A : Apply three to four drops of oil, or 0.008 inch (0.2 mm) thick grease.
- Small amount B : Apply one drop of oil (0.006±0.002 g)

(4) Areas to Avoid

No.	Do not lubricate	Reason	Remarks
1	Platen assembly (rubber face)	To prevent stained paper and illegal paper feed.	
2	Pressure roller (rubber face)	To prevent stained paper	Pay attention not to put the grease on the rubber face of the pressure roller.
3	Carriage shaft	To stabilize carriage traveling load	
4	Ink ribbon	To prevent blurring of print image	
5	Pin tractor	To prevent stained paper	
6	Flexible cable and crack	To prevent loose connection	
7	Motor PCB	To prevent loose connection	
8	Connector terminals	To prevent loose connection	

(5) Lubrication point

1. Ribbon feed gear Assy.

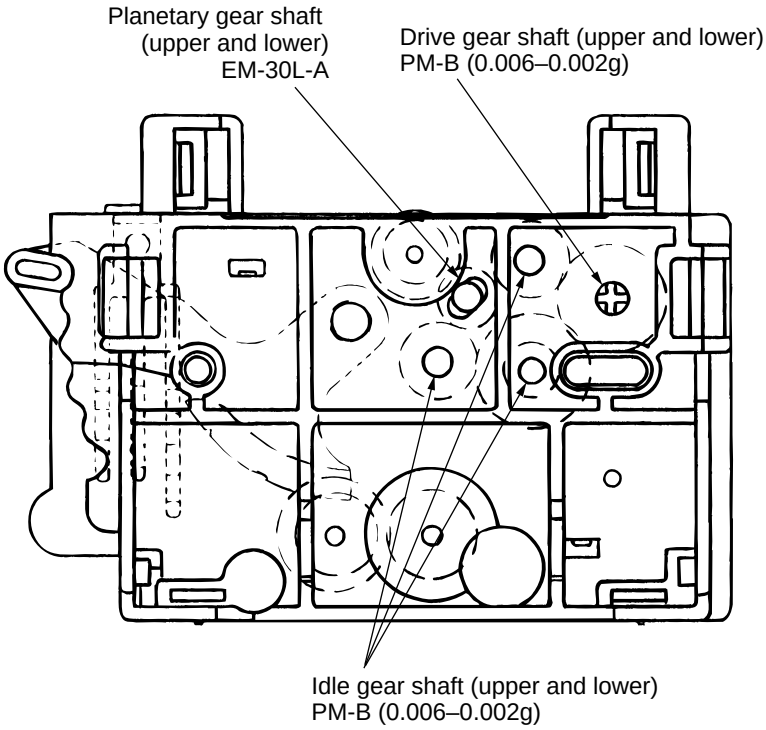

2. Space rack

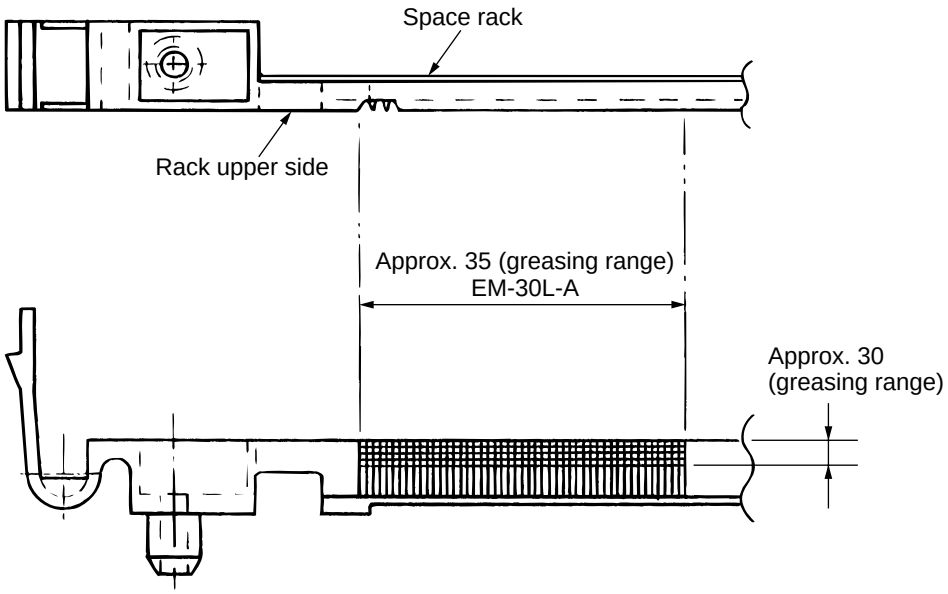

3. Platen Assy.

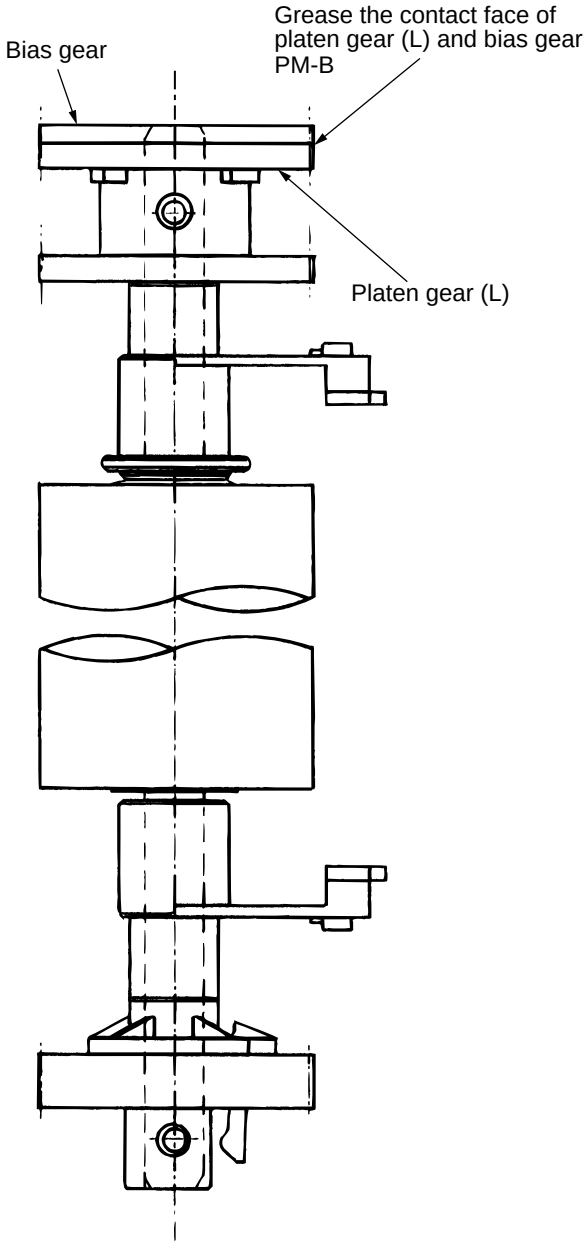

4. Tractor driving mechanism

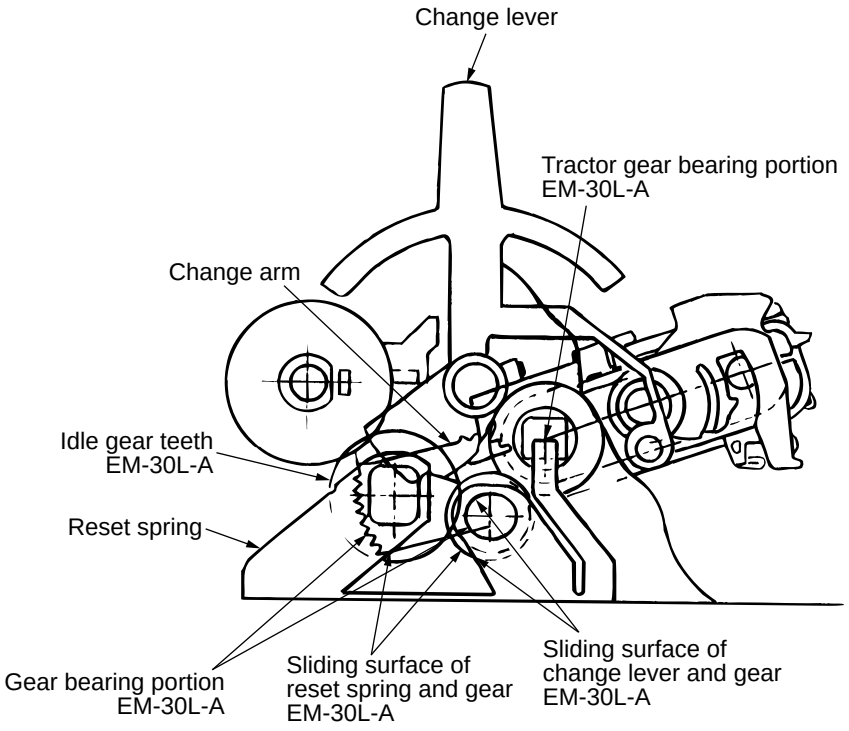

5. Tractor drive shaft

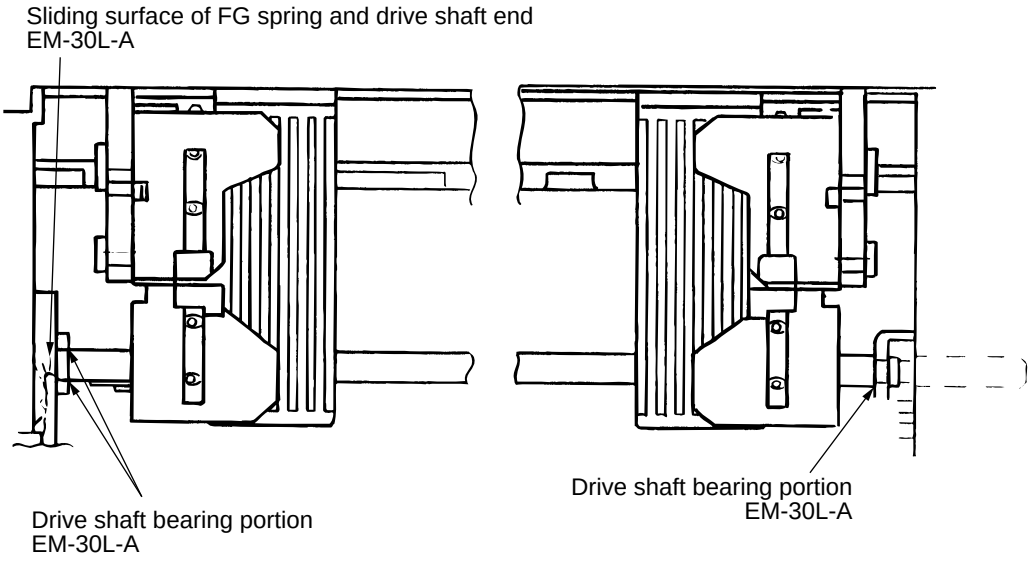

A-A Arrow view

6. Pressure roller

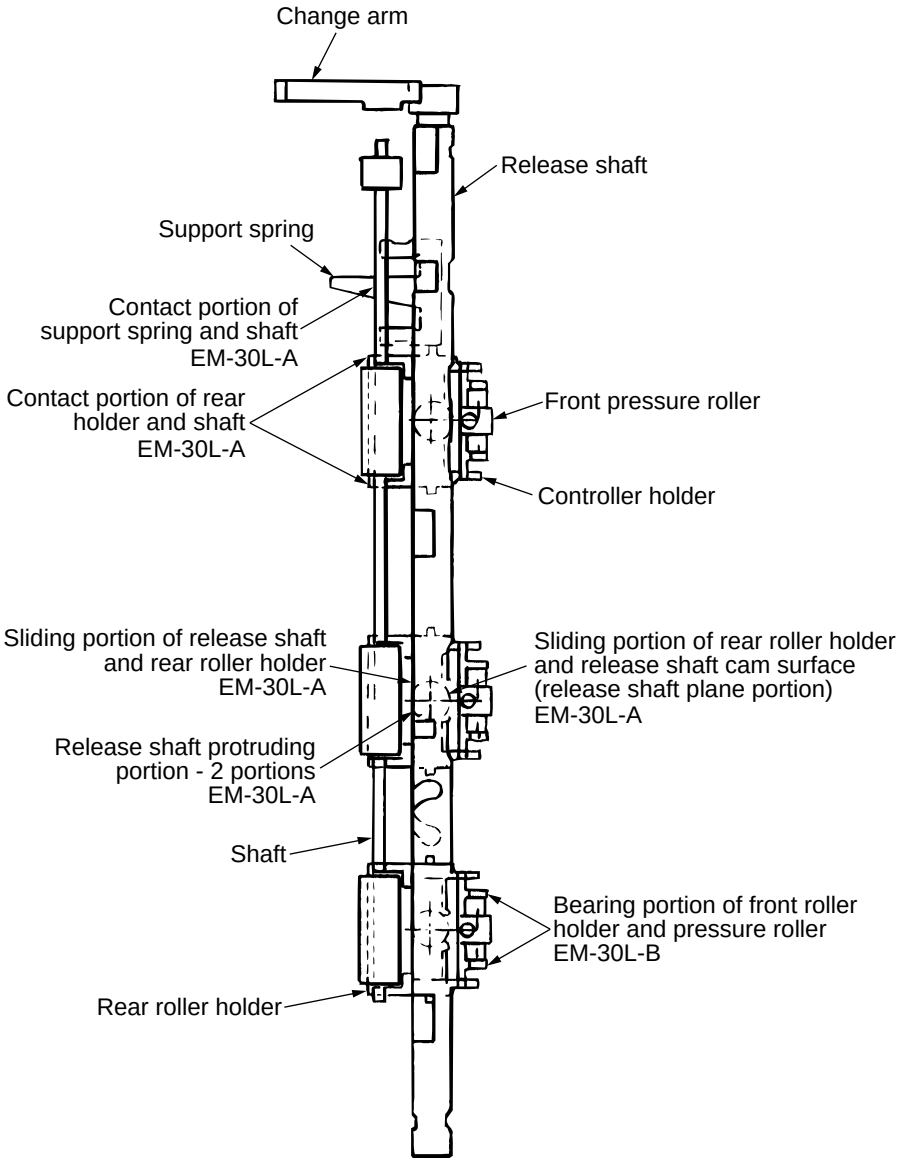

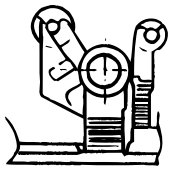

7. Pull up roller Assy.

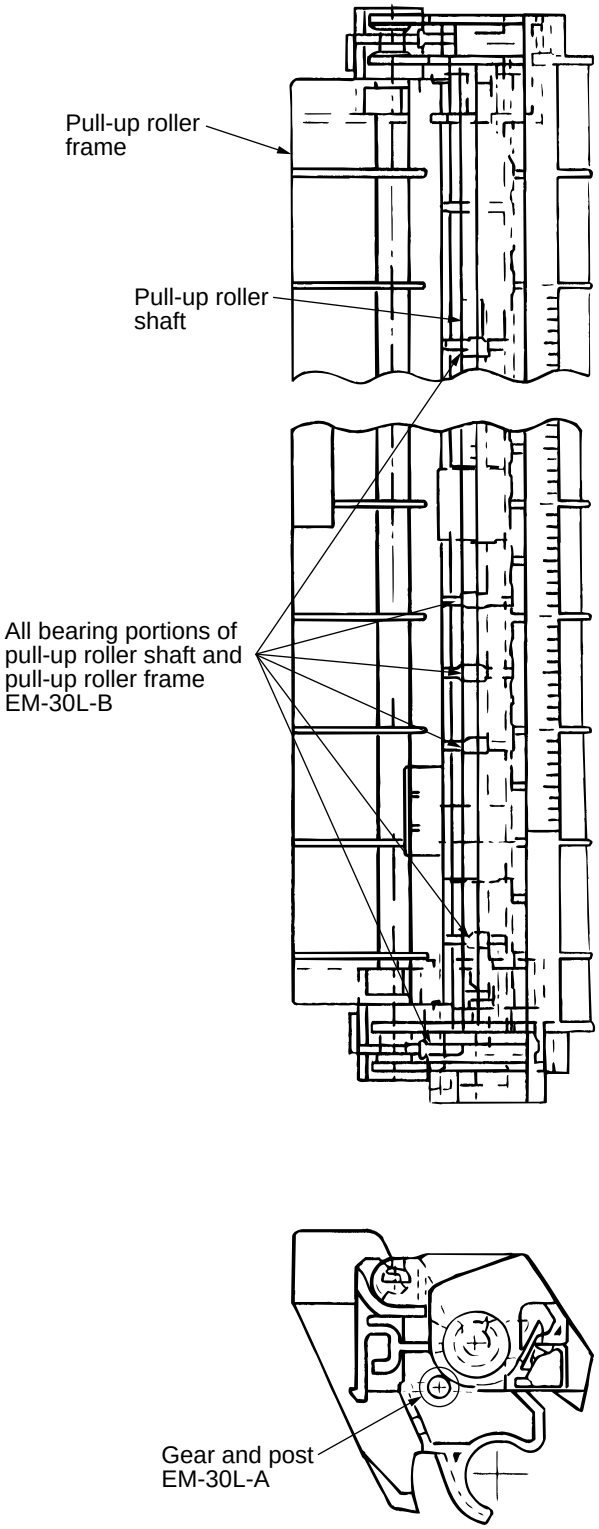

8. Main chassis Assy.

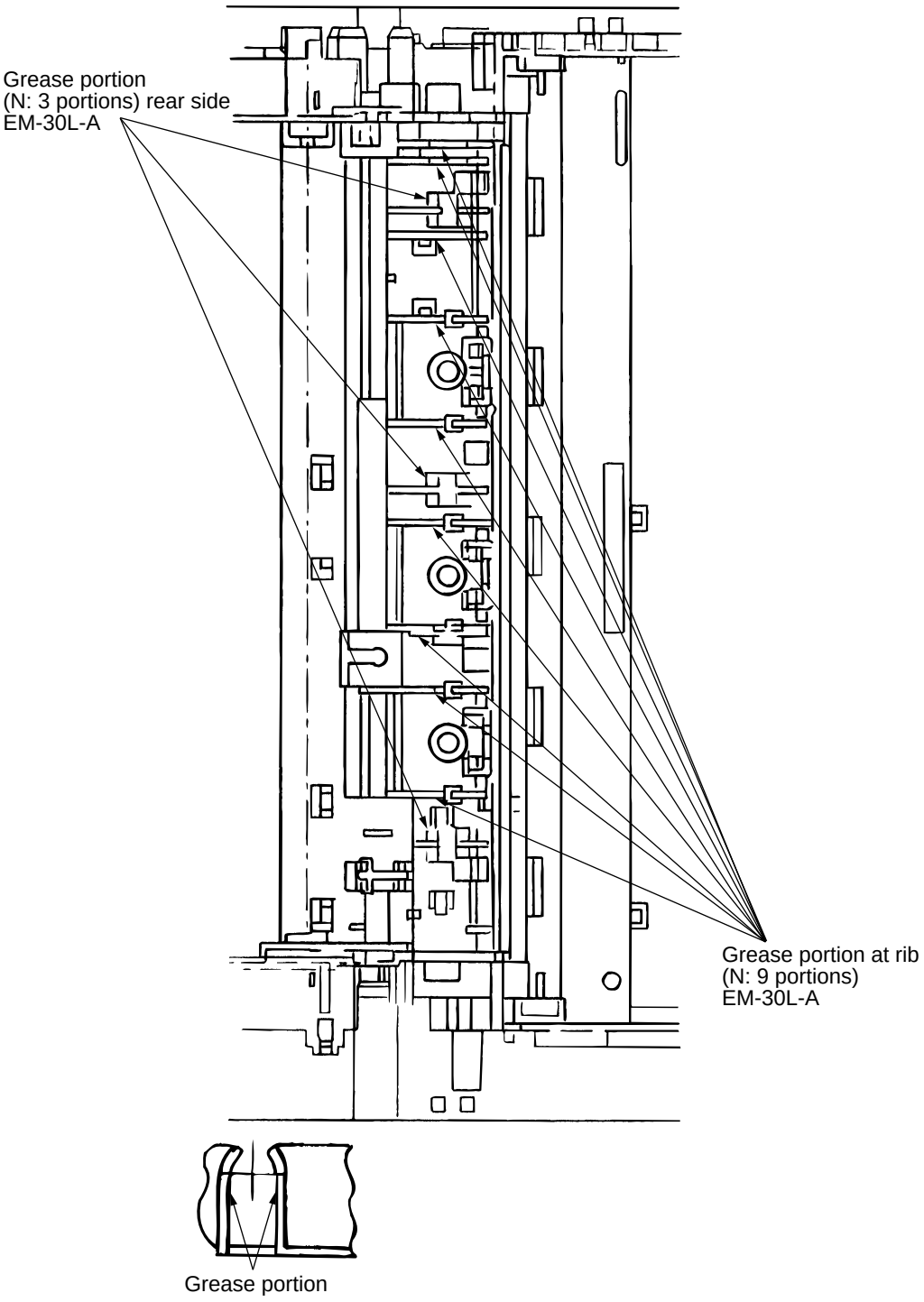

9. Carriage Assy.

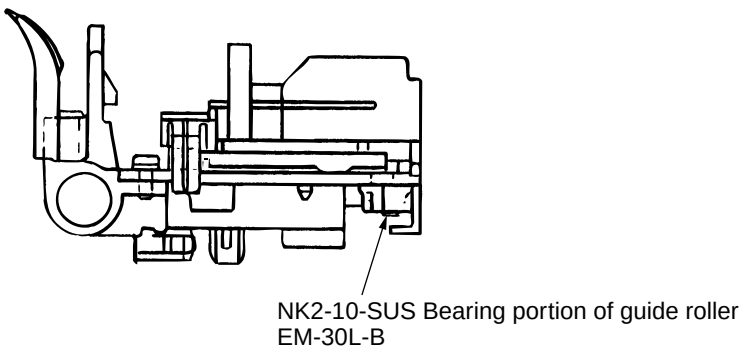

6. TROUBLESHOOTING AND REPAIR

6.1 Items to Check Before Repair

(1) Check the inspection items specified in the instruction manual.

(2) Find out as many details of the trouble as possible from the customer.

(3) Inspect in the conditions as close as possible to those at the time the trouble occurred.

(4) Proceed with the repair as follows:

Check the trouble status according to Table 6.1 for the details of the trouble. Then, locate the trouble position according to the detailed flowchart.

(5) Carry out a thorough test after the repair to check for correct functioning.

6.2 Troubleshooting Table

Table 6.1

Status	Trouble Contents	Troubleshooting Flowchart No.	Surmise of Trouble
Trouble upon power on	• Power is not supplied.	①	Power Supply Unit, Main Control PCB, Space Motor, Carriage Cable, Printhead.
	• No spacing operation	②	
	• Homing does not end normally.	③	Space Motor, Carriage Cable, Power Supply Unit, Main Control PCB, Spacing Mechanism
Trouble during printing	• Paper jam while paper insertion	④	Pressure Roller Mechanism, Pull Up Roller Cover.
	• Smearing/Missing dots	⑤	Printhead, Main Control PCB, Space Motor, Carriage Cable
	• Faint or dark print	⑥	Printhead, Ribbon Feed Assembly, Main Control PCB
	• Ribbon feed trouble	⑦	Ribbon Feed Assembly, Space Motor, Main Control PCB
	• Line feed trouble	⑧	LF Motor, Platen Assy, LF Mechanism, Main Control PCB
	• Malfunction of switch on operation panel	⑨	Operation Panel PCB, Main Control PCB
	• Data receiving failure	⑩	Main Control PCB, (RS232C I/F Board), I/F Cable, Menu Setting

* Attention in exchange:

When changed the Main control PCB, execute chapter 4 4-7 for setting the implementation printer width (Wide / Narrow).

6.3 Lamp Display

(1) Printer mode display

Table 6.2

ALARM CATEGORY	ALARM	LED CONDITION					CONTENTS	TROUBLE SHOOTING
		ALARM	SEL	MENU	10CPI	15CPI		
OPERATOR ALARM	Paper end alarm	ON	OFF	—	—	—	From, cut sheet or bottom paper end	Set New paper.
	Paper change lever alarm	ON	OFF	—	BLINK 1	OFF	Change lever is set to TOP position while paper is already inserted from rear or bottom.	• Set the lever to specified position. • Check rear sensor lever. • Replace the Main Control PCB.
	Paper jam alarm	ON	OFF	—	OFF	BLINK 1	• Cut sheet could not be ejected. • Cut sheet could not be fed properly	• Remove the paper or check feed Mechanism • Press SEL key.
	Print Head thermal alarm	OFF	—	BLINK 1	—	—	Print head temperature exceeds 119°C	• Wait until it is cooled. • Replace P.H. or the Main Control PCB.
	Space motor thermal alarm	OFF	—	BLINK 1	—	—	Temperature of space motor exceeds specified value.	• It is recovered automatically • Replace SP motor or the Main Control PCB.
FATAL ALARM		BLINK 2	OFF	OFF	See Table 6.3		Hardware Alarm has occurred.	See Table 6.3.

Note:
BLINK1 : 400ms ON, 400ms OFF
BLINK2 : 200ms ON, 200ms OFF
— : LED is kept in Current Condition (no change)

(2) Fault alram display

When the printer detects any of the various alarm states, the information is displayed as shown below on the operation panel. The alarm is specified by lamp combination of PRINT QUALITY and CHARACTER PITCH. (See Table 6.3 for details.)

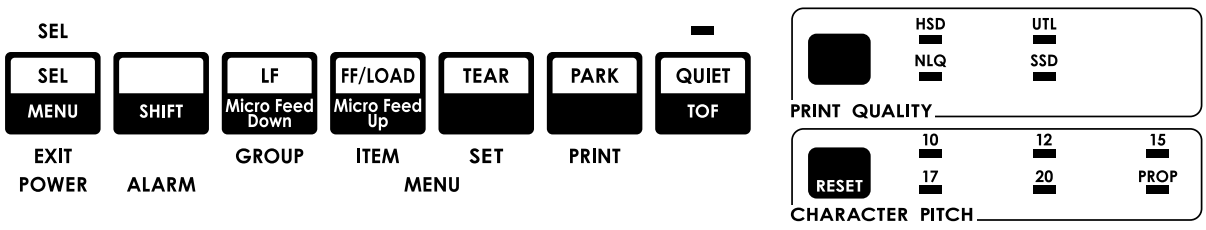

Figure 6-1

(3) Fatal Alarm

Table 6.3 (1/2)

ALARM CATEGORY	ALARM	LED DISPLAY											REMARKS	TROUBLESHOOTING
		ALARM	10	12	15	17	20	PROP	HSD	UTL	NLQ	LQ		
MAIN CONTROL ALARM	MPU internal RAM alarm	◎	○										Read/write error	Replace the Main Control PCB.
	Program ROM alarm	◎			○								Check sum error	Replace the Main Control PCB.
	CPU alarm (Pre-fetch alarm)	◎	○							○			Read/write error	Replace the Main Control PCB.
	CPU alarm (Data abort alarm)	◎	○								○		Read/write error	Replace the Main Control PCB.
	CPU alarm (Undefined alarm)	◎				○				○			Read/write error	Replace the Main Control PCB.
	LSI alarm (Bus Control alarm)	◎	○									○	Read/write error	Replace the Main Control PCB.
	LSI alarm (DMA transfer alarm)	◎	○						○	○			Read/write error	Replace the Main Control PCB.
FIRMWARE DETECTION ALARM	WDT (Watch Dog Timeout) alarm	◎				○							MPU is locked up and it is reset after about 50ms.	Turn the power OFF and ON or Board or install new firmware in the Main Control PCB.
	Interrupt control alarm (Happened illegal interrupt)	◎				○			○				Happened illegal interrupt.	Turn the power OFF and ON or Board or install new firmware in the Main Control PCB.
	CG check alarm	◎			○					○			CG data check error	Install correct firmware in the Main Control PCB.
	Firmware unmatch alarm	◎		○		○					○		Mismatched download	Install correct firmware in the Main Control PCB.

◎ : LED Blink (200ms ON, 200ms OFF)
○ : LED Lights up

Table 6.3 (2/2)

ALARM CATEGORY	ALARM	LED DISPLAY											REMARKS	TROUBLESHOOTING
		ALARM	10	12	15	17	20	PROP	HSD	UTL	NLQ	LQ		
SPACING ALARM	Spacing alarm	◎						○	○				Space IPT is not occurred within in specified timing.	• Replace space motor. • Replace P.H. cable. • Replace the Main Control PCB. • Check the mechanisms if load is too much.
	Print Head homing alarm	◎						○		○			Print head does not reach to the home position.	
PRINT HEAD ALARM	Head thermistor alarm (Open status)	◎	○				○						Thermister is open status.	• Check the P.H. connection. • Replace Print Head. • Replace P.H. cable. • Replace the Main Control PCB.
	Head thermistor alarm (Short status)	◎	○				○				○		Thermister is Short status.	
	Print Head Gap A/D alarm	◎	○				○		○				Print Head Gap Signal open	• Replace P.H. cable. • Replace Space Motor Assy. • Replace the Main Control PCB.
	FAN alarm	◎						○			○		FAN motor does not rotate	• Replace the Main Control PCB. • Replace FAN Motor
	SP Motor A/D alarm	◎	○				○			○			Thermistor is open, short with 0V or short with +5V	• Replace P.H. cable. • Replace Space Motor Assy. • Replace the Main Control PCB.

◎ : LED Blink (200ms ON, 200ms OFF)
○ : LED Lights up

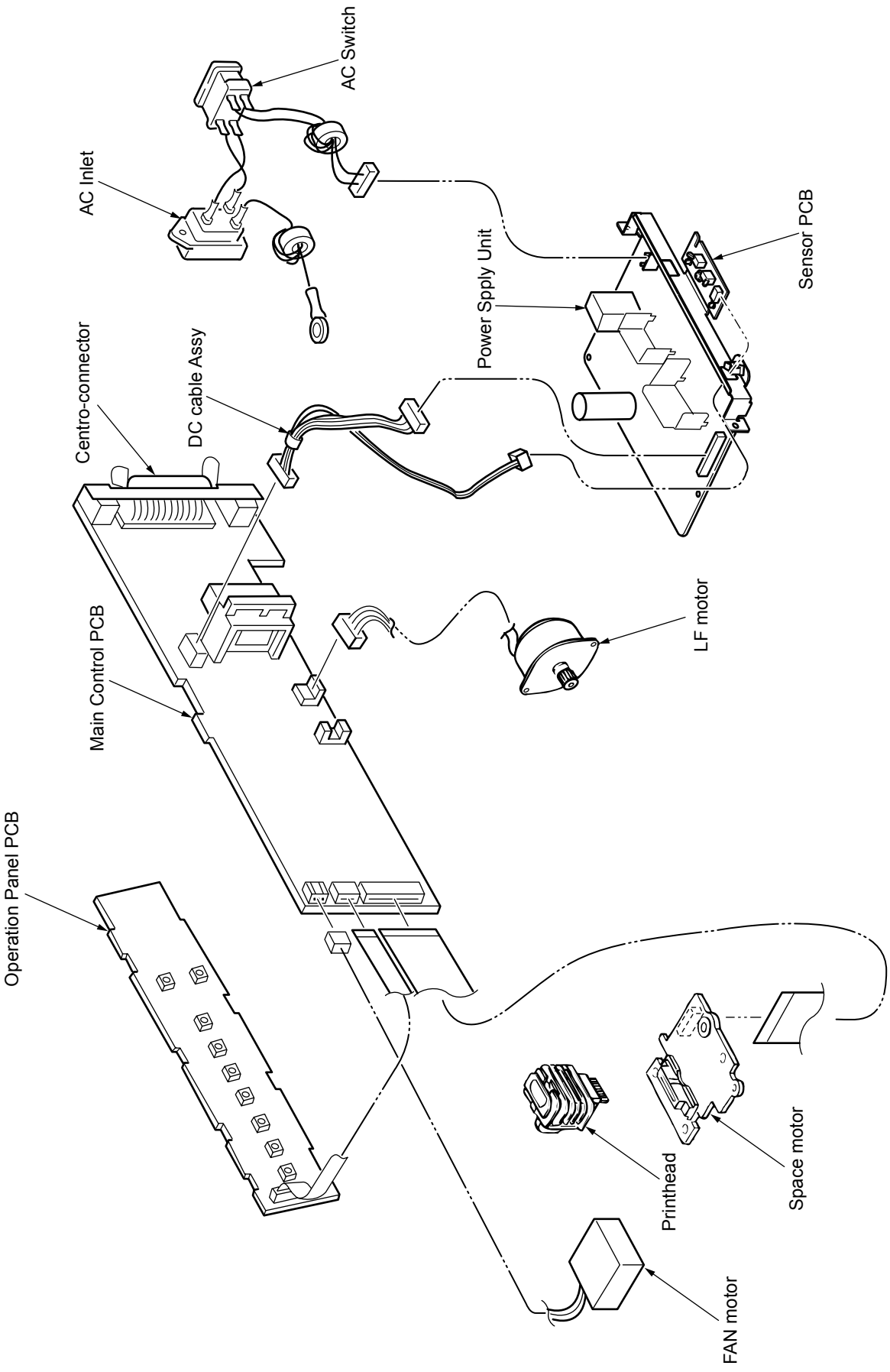
AC Switch
AC Inlet
Power Spply Unit
Sensor PCB
Centro-connector
DC cable Assy
LF motor
Main Control PCB
Operation Panel PCB
Printhead
Space motor
FAN motor

6.4 Connection Circuit Check for Printhead and SP/LF Motor

(1) Printhead

Signal	Connector pin number
HEAD1 HEAD2 HEAD4 HEAD6 HEAD8 0V HTEMP +50V +50V +50V HEAD9 HEAD7 HEAD5 HEAD3 NC	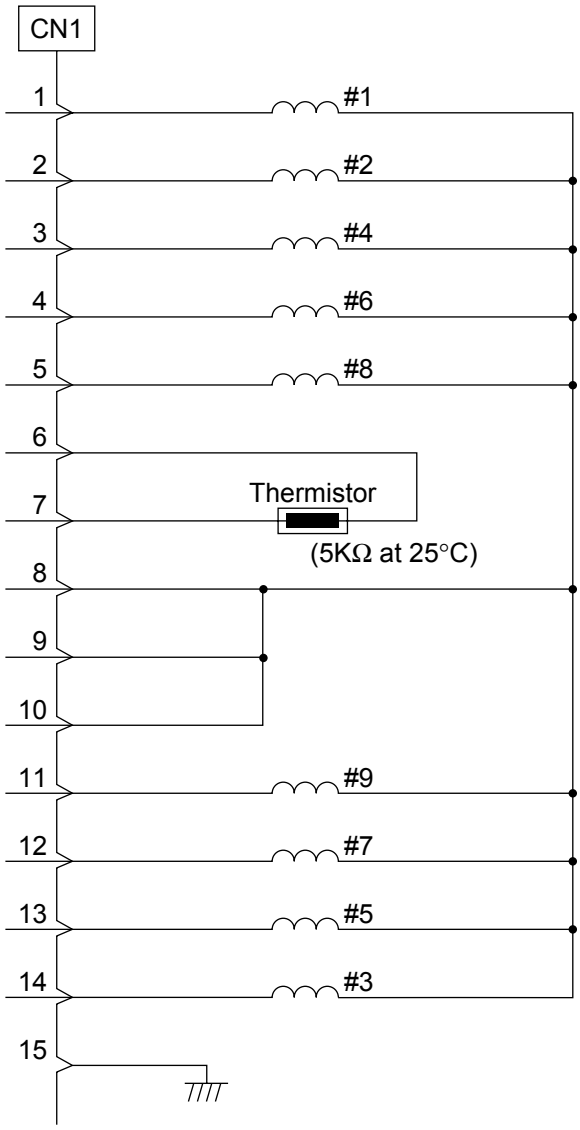

(2) Line Feed Motor

Resistance of each coil should be about 10.4Ω.

Signal	Connector pin number
LF1 LF2 LF3 LF4	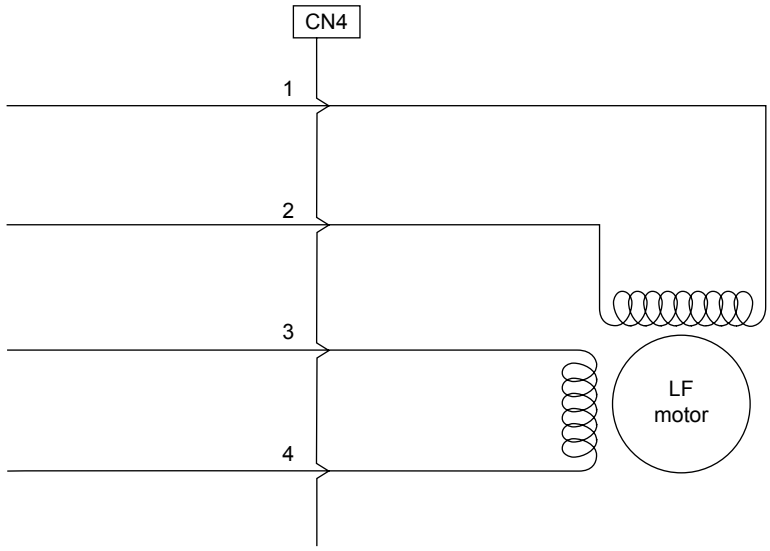

(3) Space Motor

Resistance of each coil should be about 22.4Ω.

Signal	Connector pin number
SP-U SP-V SP-W SPA SPB SPTEMP 0V	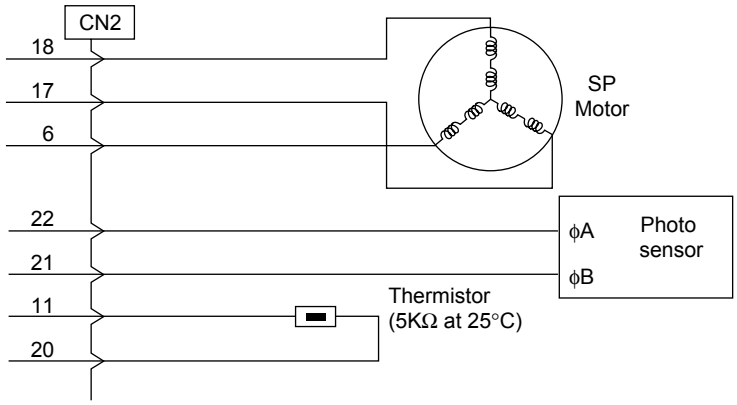

6.5 Troubleshooting flow chart

① Power is not supplied.

- Is the AC cable connected correctly?

Yes No

- Connect the AC cable correctly.

- Are the voltage setting pins on the power supply unit configured correctly?

No Yes

- ① to next step

- Does the device operate when restoring power supply after turning the power switch off and changing the settings to ones suited to the AC voltage used?

No Yes

- End

- ① Remove CN101 on power supply unit.
- Measure for any short circuits between + 5V, + 40V, 0V in POW of the Main Control PCB.
- Any short circuit?

No Yes

- Replace the Main Control PCB.

- Replace the power supply unit.

Pin No.	12	11	10	9	8	7	6	5	4	3	2	1
Signal	POWSAVE-P	ALM-P	+5V	+5V	0VL	0VL	0VP	0VP	0VP	+40V	+40V	+40V

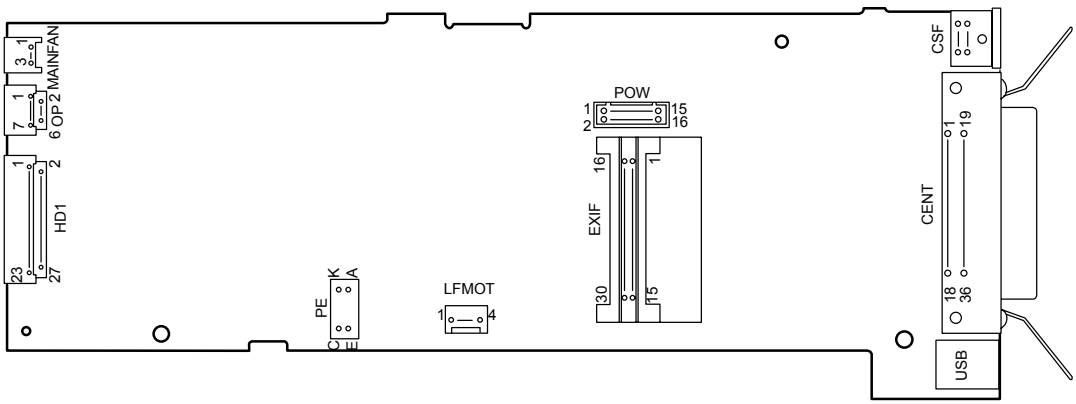

② No spacing operation (The alarm LED Blinks)

- Is carriage assembly binding or jammed?

No Yes

- Check around space motor to repair the mechanism of space belt, idle pulley, ribbon feed mechanism, and carriage frame etc.

- Replace Space motor assy.
- Remedied?

No Yes

- End

- Replace the Main Control PCB.

③ Homing does not end normally

Yes No

- Check around space motor to repair the mechanism.
  (Space rack, ribbon feed assembly back up roller, carriage frame, support protector and ribbon protector.)
- Remedied?

No Yes

- End
- Replace Space motor assy.

- Replace Space motor assy.
- Remedied?

No Yes

- End
- Replace Carriage cable.
- Remedied?

No Yes

- End
- Replace the Main Control PCB.
- Remedied?

No Yes

- End
- Replace the Power Supply Unit.

④ Paper jam while paper insertion

Jam 1

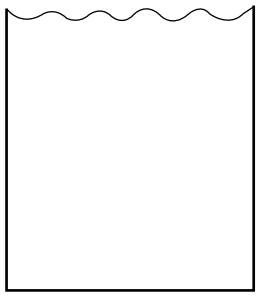

- Check the ribbon protector.
- Check the pull up roller cover is closed properly.

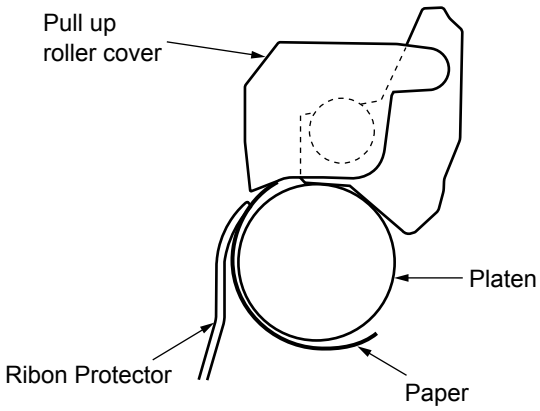

Jam 2 (wrinkled paper)

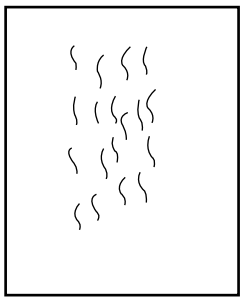

- Check around pressure roller mechanism.
  - Front pressure springs are narrow: 3 pcs; wide: 5 pcs) mounted properly or not.
  - Tension of all of front pressure rollers is properly.
  - Make sure of the fitting position of change gear shaft, change arm shaft and release shaft are correct.

⑤ Smearing/missing dots

- Does ALARM LED blink and display alarm?

No Yes

- See Tables 6.2 and 6.3 for troubleshooting information.

- Replace Printhead.
- Remedied?

No Yes

- End

- Replace the Main Control PCB.
- Remedied?

No Yes

- End

- Replace Carriage cable or Space motor assy.

⑥ Faint or dark print

- Is the print head gap set properly?

Yes No

- Adjust the printhead gap (see section 5).
- Remedied?

No Yes

- End

- Replace Printhead.
- Remedied?

No Yes

- End

- Replace the Main Control PCB.
- Remedied?

No Yes

- End

- Replace Ribbon feed mechanism.

⑦ Ribbon feed trouble

- Remove the ribbon cartridge.
- Move carriage to left and right.
- Does the ribbon drive shaft rotate?

No Yes

- Change Ribbon cartridge.

- Remove Ribbon feed mechanism.
- Move carriage to left and right.
- Does the ribbon drive shaft rotate?

No Yes

- Replace Ribbon feed mechanism.

- Replace Space motor assy.

⑧ Line feed trouble

- Turn the power off, and rotate the platen manually.
- Does the platen rotate smoothly?

Yes No

- Is the platen gear (L) broken?

No Yes

- Replace Platen assembly.
- Is the LF motor idle gear broken?

No Yes

- Replace the LF motor assembly or LF idle gear.
- Is the platen gear (R), idle gear or change gear broken?

No Yes

- Replace the gear.
- Set change lever to the rear position.
- Does the platen rotate smoothly?

No Yes

- Replace Tractor feed assembly.
- Replace LF motor assembly.
- Replace LF motor assembly.
- Remedied?

No Yes

- End
- Replace the Main Control PCB.

⑨ Malfunction of switch on operation panel

- Is the CN1 of Operation panel connected to the OP on the Main Control PCB?

Yes No

- Connect the cable properly.

- Replace the Operation panel PCB.
- Remedied?

No Yes

- End

- Replace the Main Control PCB.

⑩ Data receiving failure

- Is the SEL LED blinking?

No Yes

- Printer went into the print suppress mode.
  Wait until printer to receives DC1 code, or change the menu item “Print suppress-Ineffective” when the function is not required.

- Is the I/F RS232C?

No Yes

- To step 10-2

- Does the SEL LED light up?

Yes No

- Press SEL key.
- Remedied?

No Yes

- Does the printer receive data properly?

No Yes

- To step 10-1
- End

10-1

- Disconnect I/F cable.
- Does the SEL LED light up?

No Yes

- Change menu item I-prime to invalid, or check for defective cable.

- Replace the Main Control PCB.
- Remedied?

No Yes

- End

- Replace I/F cable.

10-2 (RS232C I/F)

Printer I/F pin assignment.

TXD	2	pin,
RXD	3	pin,
SSD	11	pin,
DTR	20	pin,
DSR	6	pin.

- Is the correct cable used?

Yes — No

- Change I/F cable.

- Is ALARM LED blinking?

No — Yes

- See tables 6.2 and 6.3 for the troubleshooting.

- Make sure of the parameters for RS232C in the menu are correct.

  - Baud rate
  - Bit length
  - Parity
  - Protocol
  - Busy signal and its polarity

- Remedied?

No — Yes

- End

- Replace RS232C I/F board.

- Remedied?

No — Yes

- End

- Replace the Main Control PCB.

Appendix A PCB LAYOUT

PCB list

(1) Main Control PCB

(2) Operation Panel PCB

(3) Power Supply Unit

(4) Sensor PCB

(1) Main Control PCB

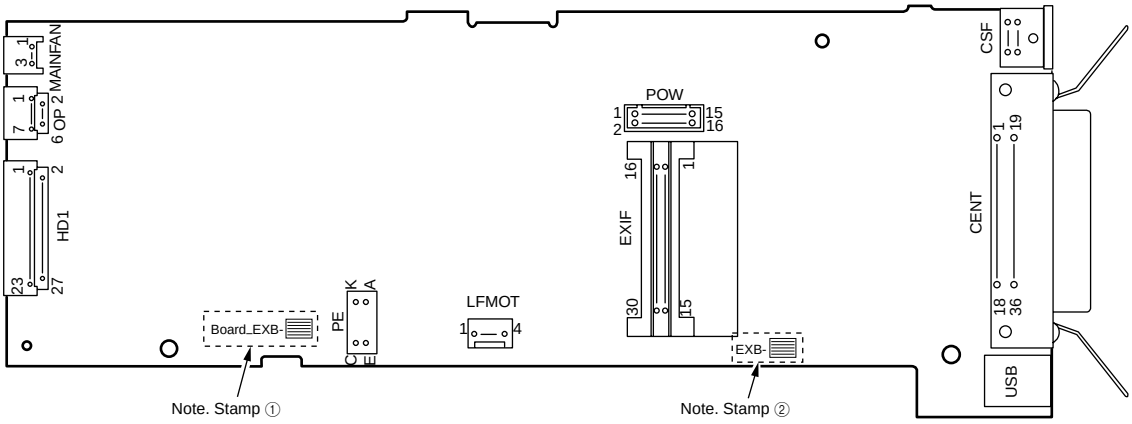

Note. Stamp

Spare Parts number	Printer	User	Stamp ① *1)	Stamp ②
44779902	ML420/ML421	ODA	Board-EXB-[2]	EXB-[2]
44779904	ML5520/ML5521	OEL	Board-EXB-[4]	EXB-[2]

*1): Stamp ① is printed only on maintenance PCBs.
It is not printed on PCBs that are shipped assembled in devices.

(2) Operation Panel PCB

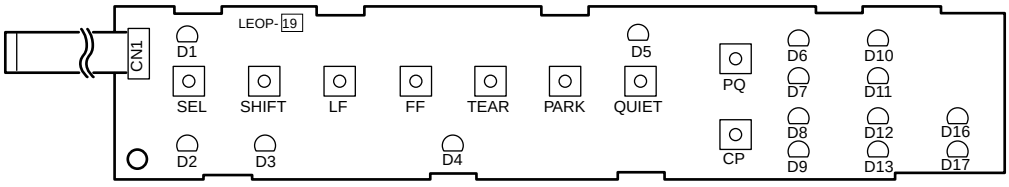

(3) Power Supply Unit

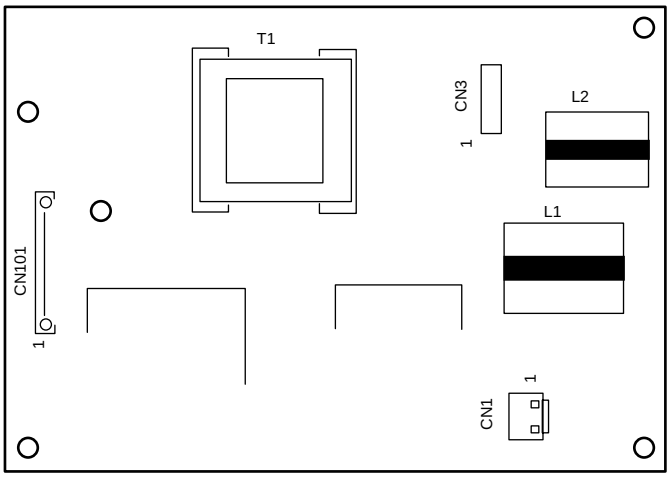

(4) Sensor PCB

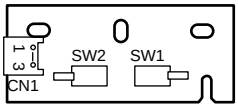

Appendix B RS-232C SERIAL INTERFACE BOARD (OPTION)

1. GENERAL

This section describes the operation of the RS-232C Serial Interface board installed in the Printer as an option using a start-stop synchronization and serial communications circuit. This serial interface board is capable of transmitting and receiving simultaneously at speeds up to 19,200 bits per second. Two protocols are available: printer Ready/Busy and X-ON/X-OFF modes.

ROM/RAM/CPU is not installed in this option board. Driver and receiver IC are controlled according to the control signal from the Main Control PCB.

2. OPERATION DESCRIPTION

2.1 Element Description

The driver and the receiver for RS232C of 5V signal power supply are installed on this optional board.

(1) HIN202E

It is driver, and receiver IC for RS232C that operates by 5V single power supply.

2.2 Circuit Description

A block diagram is shown in Figure B-1.

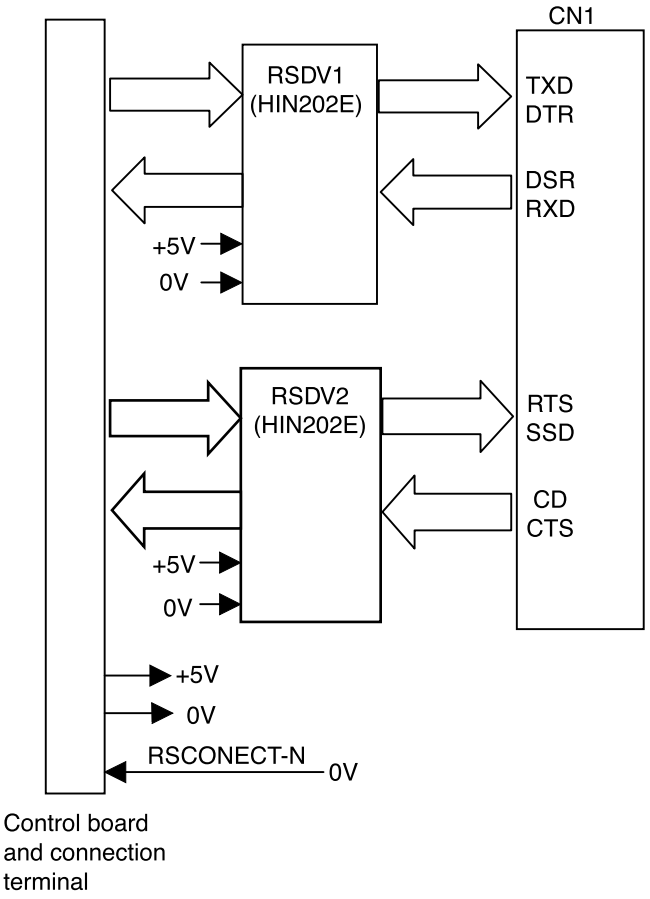

Figure B-1 Block Diagram

2.2.1 Operation at power on

It becomes possible to use the RS232C board because SOC of the Main Control PCB recognizes that the RSCONECT-N signal is connected with OV when the power supply is turned on.

2.2.2 RS-232C interface

The DTR, SSD, TXD and RTS signals output by the SOC are converted to RS-232C signals by line driver receiver HIN202E (RSDV1, RSDV2) and sent to the interface.

In addition, signals DSR, CTS, CD, and RXD on the RS232C interface are converted to TTL level by line driver receiver HIN202E (RSDV1, RSDV2) and input to the SOC.

2.3 Communication Procedure Flowchart

2.3.1 Mode ⓐ

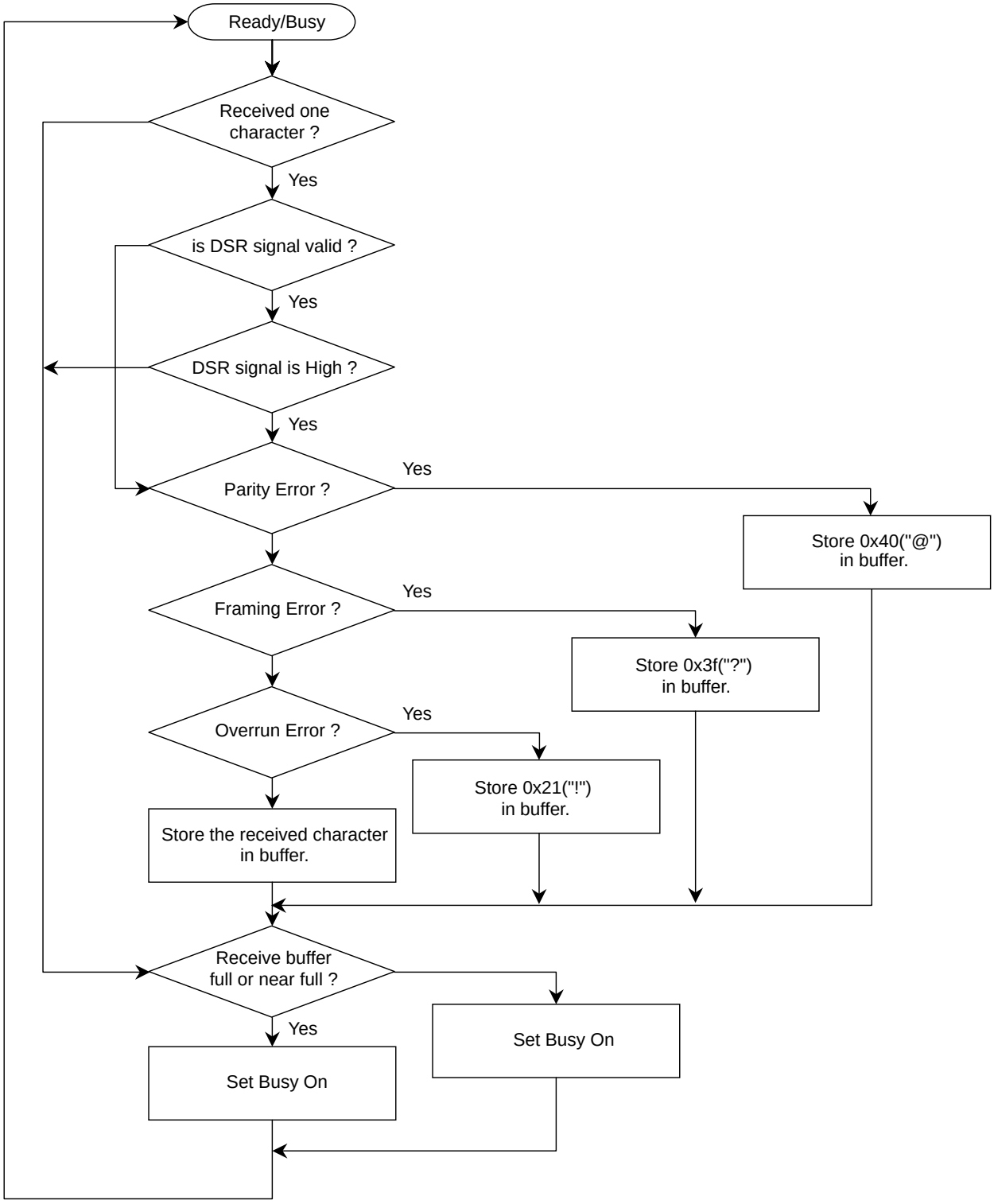

Figure B-2

2.3.2 Mode ⓑ

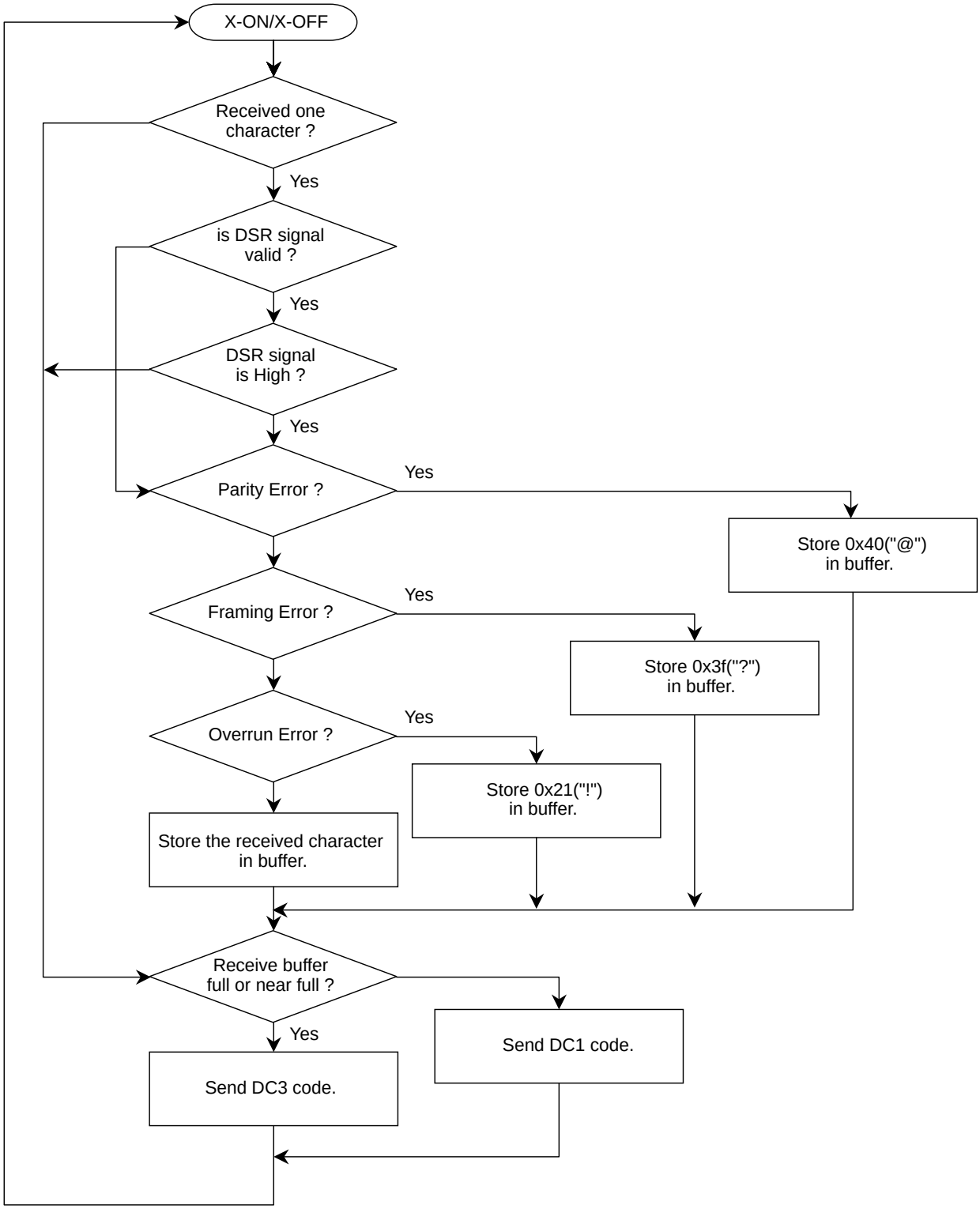

Figure B-3

3. TROUBLESHOOTING FLOWCHART

3.1 Before Repairing a Fault

Before servicing the printer, ask the customer in what situation the trouble occurred and record the response.

Before starting troubleshooting, operate the printer in the same situation as that at the time of trouble occurrence to see if the same trouble occurs again. If not, perform the printers self test and thoroughly test the printers functionality. If the trouble is reproducible proceed to the troubleshooting section.

3.2 Troubleshooting

(1) The data is not received using a serial interface.

(2) Using a serial interface, the print data is omitted or the print operation is not performed.

① The data is not received using a serial interface.

(A protocol is set to READY/BUSY state, and BUSY LINE is in SSD + state.)

- The RxD of RSDV1 as specified in Figure B-1?

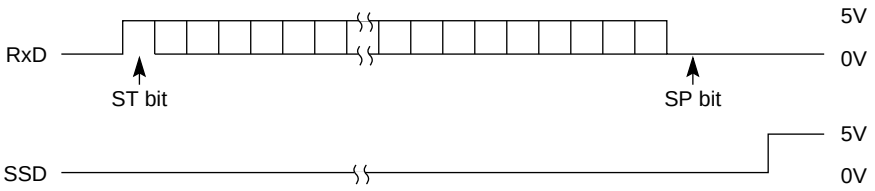

Figure B-1

  - No Replace the RS232C optional board.

- Yes Replace the Main Control PCB.

② In receiving by serial interface, printing data is omitted or printing operation is not performed.

- Are RxD and SSD of RSDV1, RSDV2 as specified in Figure B-1?

  - No Replace the RS232C optional board.

- Yes Replace the Main Control PCB.

3.3 Local Test

3.3.1 Circuit test mode

3.3.1.1 Setting

(1) Diagnostic test (set by menu)

(2) Test connector

Connect the test connector shown in Figure B-9 to the interface connector

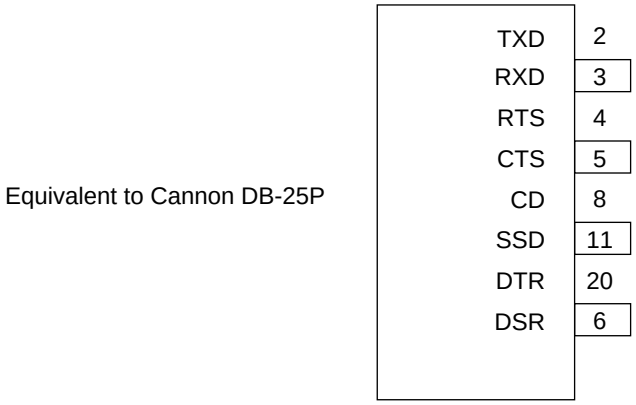

Figure B-9 Test Connector Connection Diagram

3.3.1.2 Function

After the settings outlined in Section 3.3.1.1 are completed and power is turned on, the serial interface checks the message buffer memory and interface driver/receiver circuit. It then prints characters.

To start and stop this test, push the SEL switch on the front of the printer.

Details of this test are explained on below.

(1) The program revision using two numerical characters is printed.

(2) “LOOP TEST” is printed.

(3) Memory is checked for the message buffer.

(4) Prints “OK” is printed if the memory check is OK and “BAD” is printed if the memory check fails.

(5) Output level to DTR, RTS, and SSD signals is dropped low. If DSR, CTS, or CD signals is High, “IF BAD” is printed. If DSR, CTS, and CD signals are all Low, “IF OK” is printed.

(6) Output level to DTR, RTS, and SSD signals is raised high. If DSR, CTS, or CD signals is Low, “IF BAD” is printed. If DSR, CTS, and CD signals are all High, “IF OK” is printed.

(7) Transmits characters codes from 20H to 7EH is transmitted by TXD signal. At the same time, characters are received by the RXD signal and stored in the message buffer.

(8) The characters that were stored in the message buffer as indicated in (7) are printed.

(9) Steps (1) through (8) are repeated until test is interrrupted.